USER MANUAL

C.P.A. S.R.L.

HEAT PUMPS USER MANUAL
BLUEFIRE SERIES

C.P.A. srl
Via Don Demetrio Castelli, 71 - 12060 RODDI (CN)
Tel. 0173.615693 - Fax 0173.620922
www.cpa-piscine.it
cpa@cpa-piscine.it

Ver.06 - 2018-05-28

SUMMARY

	1
DESCRIPTION	3
INSTALLATION	3
CHOICE OF THE POSITIONING AND INSTALLATION AREA 3	3
CONNECTING HYDRAULIC CIRCUIT (BY-PASS)	5
ELECTRICAL CONNECTION	6
TECHNICAL FEATURES JUNIOR SERIES	7
TECHNICAL FEATURES SENIOR SERIES	7
DIMENSIONS	8
PRELIMINARY SIZING OF CONNECTION CABLES	8
OPERATIVE GUIDE	9
1. CONTROL KEYBOARD DESCRIPTION	9
2. WORK STATE CONTROL	10
3. STATUS MENU PARAMETERS PROGRAMMING	10
4. Programming parameter list	11
5. Time settings	12
6. Programmed start / stop by clock	12
7. Keyboard lock	13
8. Memory backup after power is resumed	13
9. Maintenance	13
10. Alarm codes	14
11. PCB connections diagram	15
12. Connection diagrams	16
13. error codes	19
14. how to get assistance	20
15. Raccomendations for the correct installation	20

DESCRIPTION

The BLUE FIRE heat pump, a 2013 novelty marketed by CPA Piscine, has a technology based on the use of an electronic expansion valve that adjusts the gas flow with extreme precision, allowing constant heating to be maintained in the refrigeration system. In addition, the new heat pump is characterized in its operation by defrosting by inversion of the cycle which thus allows it to operate even with a very low external air temperature (up to 0 °), more quickly and more effectively than other systems. defrost.
The external body of the heat pump body is in metal sheet with protective spray paint.
The protection and wintering cover is optional.

Main features:
1- Titanium heat exchanger with high corrosion resistance
2- LCD display with control panel and water temperature check
3- R410A refrigerant respecting the environment.
4- Protection for the high and low pressure of the refrigerant circuit
5- Automatic protection stop for excess temperature.
6- Self-defrosting to guarantee optimal operation even in low temperature environments 7- Steel body with pre-painting fixed to the oven
8- Constant heating and cooling function usable for swimming pools and SPAs 9- Anti-running idle flow sensor

INSTALLATION

WARNING!!!
The heat pump must only be installed by qualified personnel!

WARNING:

- Never lift the machine by the hydraulic fittings, there is the risk of damaging the connection with the titanium exchanger located inside the machine..
- The heat pump must always be placed in a vertical position, NEVER in a horizontal position..

The warranty does not cover damage caused by poor maintenance!

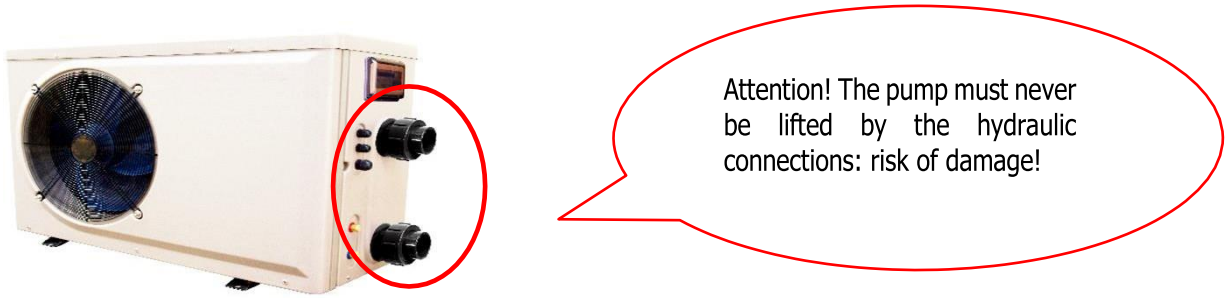

CHOICE OF THE POSITIONING AND INSTALLATION AREA

The positioning and installation of the heat pump are essential to ensure optimal operation. Usually the points to be respected are the following:

- The heat pump must be imperatively installed outdoors, and a minimum distance must be respected with any type of wall (walls, wooden walls, plant coverings ...) so as not to obstruct the circulation of air through the machine.

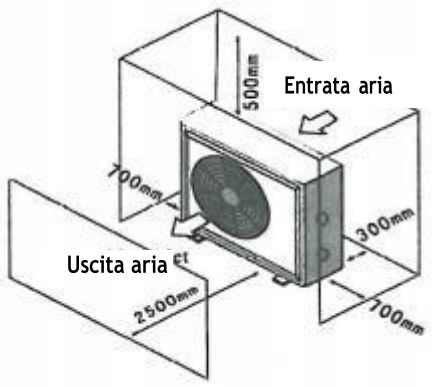

- The air emitted by the fans must not be re-aspirated, not even partially: for this

  reason, the machine must not be installed in a place confined by a set of walls, even if the distances indicated above are respected.
- The heat pump must not be directly exposed to prevailing winds.
- The distance that separates the heat pump from the pool must not be excessive (preferably less than 10 m) in order to limit heat losses in the pipes connecting to the pool's filtration circuit.
- Access to the heat pump must be practical, in order to facilitate maintenance operations, which may require the transport of heavy materials.

Water must not accumulate at the foot of the heat pump in case of rain and the condensation resulting from its operation must be evacuated correctly (note: any condensation at the foot of the heat pump is proof of correct operation ; in no case can it be considered as a loss of coolaIl supporto della pompa di calore deve essere stabile e solido:

- Ground installation: best prepare a concrete slab about ten cm thick, at least the size of the machine base.
- Installation in height: the support and its fixing on the wall must resist the weight of the machine (with a safety margin) without deformation. The solidity of the support must not be compromised by the oxidation of its materials over time.

The hydraulic connections must not be constricted by the pipes: the pipes must be placed on the ground on a rigid support, or buried, and rise vertically immediately next to the pump. They must not exert overloads on the hydraulic connections of the same. Furthermore, it is advisable to use a rigid pipe on the vertical part up to the machine and fix it solidly to the wall through fixing collars.

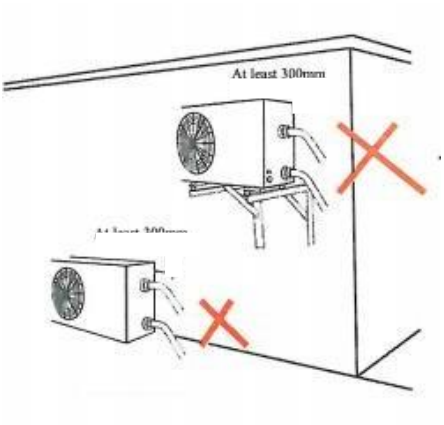

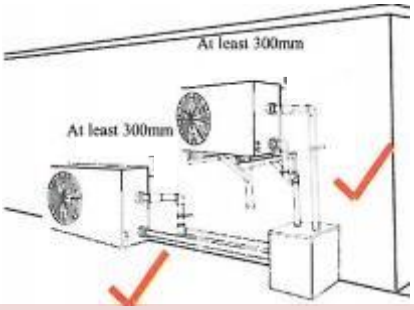

We suggest the use of rigid pipes so as not to put the weight of the connecting pipes on the pump unions.

It is absolutely not necessary to place flammable or corrosive objects near the heat pump in order to avoid any risk of damage or accidents.
Never place the pump near fire-fighting nozzles, never keep chemicals that are corrosive or that can emit acid or alkaline vapors near the pump. If the pump is installed close to the sea, it must be protected from splashes, winds from offshore or laden with sand. Protective panels arranged at the minimum recommended distance can be used for this purpo.

HYDRAULIC CONNECTION CIRCUIT (BY-PASS)

The circulation of the pool water through the heat pump is generally obtained using a pump already placed at the level of the pool filtration circuit (in order to avoid the attachment of an additional pump).
For this reason, it is advisable to design a branch circuit from the filtration circuit and equip it with three valves:

- An adjustable opening valve, positioned between the delivery and return connections: this allows you to adjust the ratio between the water flow that passes through the heat pump and the water flow that does not pass through it, so to obtain the debt incurred through the heat pump (compare the table).
- A valve positioned near the pump, on the water inlet pipe.
- A valve positioned near the pump, on the water outlet p.

These last two valves are usually always in the open position, they must be closed only when it is necessary to intervene on the pump circuit or to disassemble it.
The by-pass connections must be strictly located downstream of the filter to minimize greasing of the exchanger, and upstream of any injection of chemical products for disinfestation and pH regulation (provide a space of 1.5 meters of pipes such as minimum) to minimize the risk of corrosion of the exchanger.
The injection of chemical products must be strictly subject to filtration. Make sure that the installation cannot cause accidental siphoning of the chemical product tanks since the filtration does not work.
Be very careful not to introduce impurities (pebbles, earth ...) into the pipes. These
they would risk clogging the exchanger during start-up.
The heat pump is equipped on one of its sides with two union joints for the entry and exit of the pool water. The water inlet and outlet pipes are to be glued on these joints. Allow to dry thoroughly before starting the water circulation circuit.

Physical-chemical parameters of the pool water:
the pool water treatment chemicals currently on the market are compatible with the materials used for the construction of the heat pump, provided that the physico-chemical characteristics of the water comply with the following recommendations:

- pH between 7 and 7.4
- hydrometric title (TH) below 20 ° C
- Cyanuric acid content (stabilizer) below 80 ppm
- Free chlorine concentration from 1.0 to 1.5 ppm
- Concentration of free bromine from 1.0 to 1.5 ppm

These characteristics must be verified at the beginning of the season, before circulating the water in the heat pump, then regularly during the period of operation.

WARNING:
"Shock" treatment of the pool water: if you perform a "shock" treatment of the pool water, it is necessary to isolate the hydraulic circuit (by acting on the by-pass valves) on which the heat pump is connected, before starting to increase the disinfectant concentration and wait for this value to return to normal before re-opening the valves.
To limit heat dispersion in the pipes connecting the pump to the swimming pool circuit, it is recommended not to move the heat pump more than 10 meters away from the swimming pool.
Beyond a certain length, the pipes must be buried at a sufficient depth (take into account the risk of ground freezing according to the local temperatures encountered) and adequately insulated.

ELECTRICAL CONNECTION

- Call a qualified electrician to carry out this step.
- Make sure that the voltage, the number of phases and the supply frequency correspond to the characteristics of the heat pump (compare the table).
- Make sure that the section of the power cable complies with the electrical characteristics of the installed pump.
- Place a device with residual current of 30 mA at the head of the heat pump supply line.
- The active conductors of the power supply line of the machine must be protected by a magneto-thermal switch or by fuses of the rating recommended in the following table.
- Ensure proper placement of the machine.

TECHNICAL FEATURES OF THE SERIES JUNIOR

Codie	1041130	1041131	1041139	1041132
Model	**SBR-3.8H-B**	**SBR-5.3H-B**	**SBR-9.5-H-B**	**SBR-11.3-H-B**
Power returned at 26 ° C of air temperature [kW]	3,80	5,30	9,50	11,30
C.O.P.	4,30	4,60	4,90	4,80
EER	3,50	3,50	3,50	3,50
Recommended water flow [m3 / h]	2 a 4	2 a 4	4 a 7	5 a 8
Nominal consumption [kW]	0,79	1,08	1,94	2,35
Power supply [V]	230-50 Hz	230-50 Hz	230-50 Hz	230-50 Hz
Nominal absorption [A]	3,60	5,00	8,80	10,70
Heat exchanger	Titanium in metal shell	Titanium in metal shell	Titanium in metal shell	Titanium in metal shell
R410A weight [kg]	0,60	0,67	1,00	1,40
Acoustic power [dBA] at 1 m	47	49	53	55
Compressor type	Rotative	Rotative	Rotative	Rotative
Hydraulic connection [mm]	50	50	50	50
Net weight [kg]	40	48	57	81
Recommended tank volume [m3]	15 a 20	24 a 30	40 a 50	40 a 50

SENIOR SERIES TECHNICAL FEATURES

Code	1041133	1041134	1041140	1041135	1041136	1041137
Model	**SBR-14.0H-B**	**SBR-17.0H-B**	**SBR-17.0H-B-S**	**SBR-21.0H-B-S**	**SBR-26.0H-B-S**	**SBR-45.0H-A-S**
Power returned at 26 ° C of air temperature [kW]	14,00	17,00	17,00	21,00	26,00	45,00
C.O.P.	4,80	4,70	4,70	4,60	4,80	4,50
EER	3,50	3,50	3,50	3,30	3,30	3,2
Recommended water flow [m3 / h]	5 a 8	5 a 8	5 a 8	6 a 10	6 a 12	8 a 15
Nominal consumption [kW]	2,91	3,70	3,70	4,55	5,65	9,90
Power supply [V]	230-50 Hz	230-50 Hz	400-50 Hz	400-50 Hz	400-50 Hz	400-50 Hz
Nominal absorption [A]	13,10	17,60	5.9 x 3	7.2 x 3	8.9 x 3	15 x 3
	Titanio in scocca di metallo	Titanio in scocca di metallo	Titanio in scocca di metallo	Titanio in scocca di metallo	Titanio in scocca di metallo	Titanio in scocca di metallo
Heat exchanger	1,64	1,80	1,80	2,43	2,60	2,30 x 2
R410A weight [kg]	55	55	55	55	55	62
Acoustic power [dBA] at 1 m	Rotative	Rotative	Rotative	Scroll	Scroll	Scroll
Compressor type	50	50	50	50	50	50
Hydraulic connection [mm]	120	132	132	143	145	255
Weight kg]	45 a 63	60 a 80	60 a 80	70 a 95	100 a 120	160 a 200

DIMENSIONS

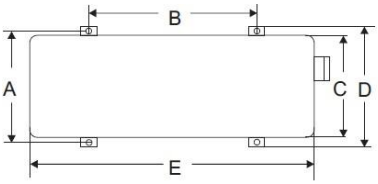

SBR-21.0-H-B-S
SBR-26.0H-B-S

SBR-3.8H-B SBR-5.3H-B SBR-11.3H-B
SBR-14.0H-B SBR-17.0H-B SBR -17.0H-B-S-

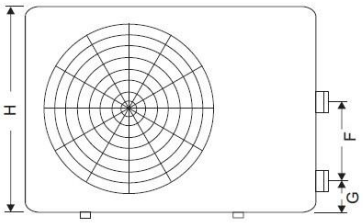

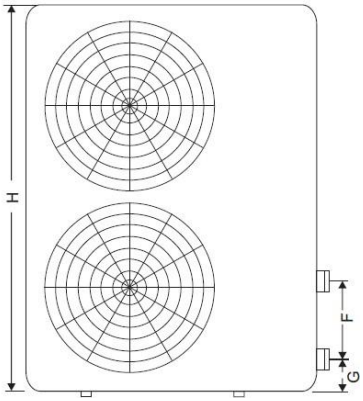

Model[1]	A	B	C	D	E	F	G	H
SBR-3.8H-B	330	685	285	360	935	200	80	520
SBR-5.3H-B	330	685	285	360	935	200	80	520
SBR-9.5H-B	330	640	305	370	1010	270	80	585
SBR-11.3H-B	440	760	425	470	1115	370	80	685
SBR-14.0H-B	440	760	425	470	1115	370	80	935
SBR-17.0H-B	440	760	425	470	1115	370	80	935
SBR-21.0-H-B-S	440	760	425	470	1115	370	80	1250
SBR-26.0H-B-S	440	760	425	470	1115	370	80	1250

SBR - 45.0H-A-S

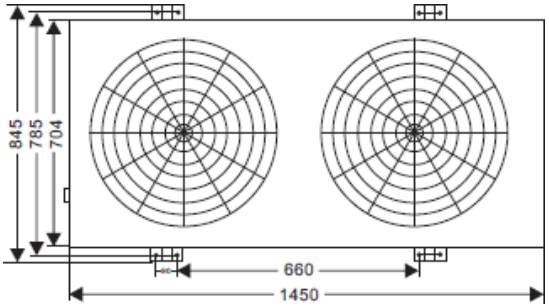

PRELIMINARY SIZING OF CONNECTION CABLES 2

SBR-3.8H-B , SBR-5.3H-B - (1.5 $mm^2 \times 3$)

SBR-9.5H-B , SBR-11.3H-B , SBR-14.0H-B , SBR-17.0H-B - (2.5 $mm^2 \times 3$)
SBR-17.0H-B-S , SBR-21.0H-B-S , SBR-26.0H-B-S (2.5 $mm^2 \times 5$)SBR-45.0H-A-S(4.0 $mm^2 \times 5$)

- 1 The letter "s" indicates that the machine must be powered with three-phase current. The operation of the heat pumps is guaranteed within a range of
- temperature that varies between 0 ° C and +43
- 2 The following indications are recommendations for a correct sizing of the power supply line, however it is up to the installer, professional
- enabled, the verification and correct sizing of the line in compliance with the legislation in force in the country of installation

OPERATIVE GUIDE

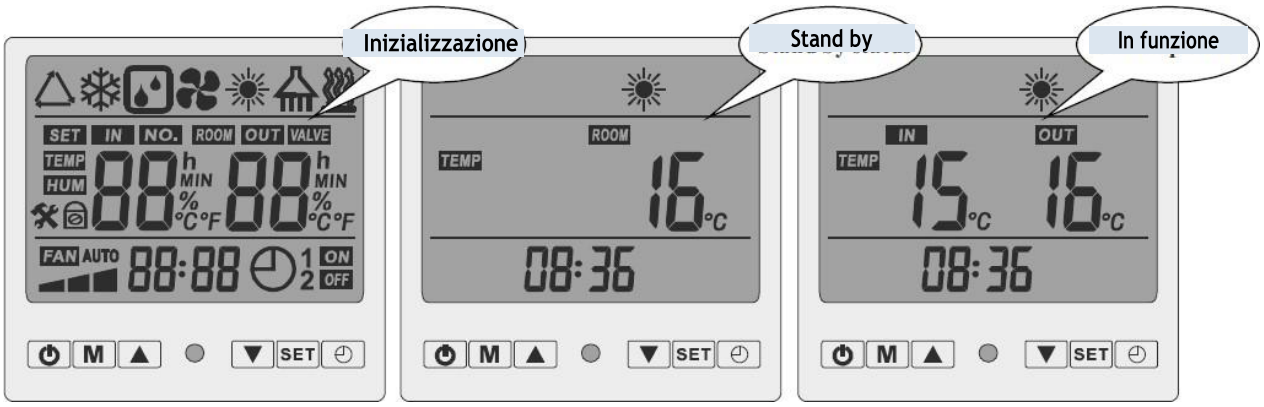

Note: In the "Stand By" state the heat pump is connected to the power supply but is not active.

1. CONTROL KEYBOARD DESCRIPTION

Press the button to switch the heat pump on and off. This is allowed in all conditions where the pump is located.

M

Press the button to change working mode:

AUTO HEATING COOLING

Scroll up button scroll down. Together with the "SET" button it selects and modifies the working parameters set in the programming menu.

WARNING

Changing the factory default parameters is only possible when the pump is in stand-by. Changing these values must only be carried out by qualified personnel.

SET

Allows you to access the device programming menu display. Together with the buttons scroll up and scroll down select and modify the working parameters.

Button for setting the time interval for turning the heat pump on or off. Together with the scroll up and scroll down buttons, it allows you to set these time intervals.

2. WORK STATE CONTROL

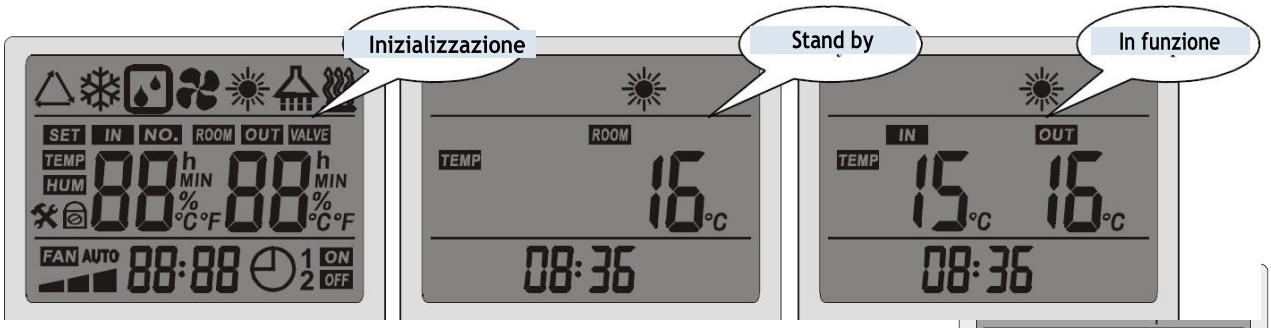

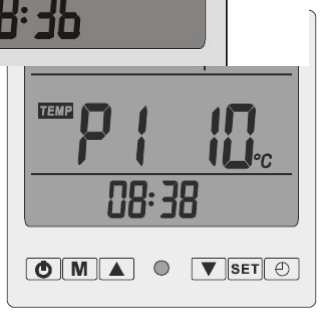

When the heat pump is inactive, the display indicates the temperature external environment.
When the heat pump is on, the display indicates the temperature of the incoming water and the temperature of the outgoing water.
By pressing the scroll up or down buttons it is possible to check the parameters P1, P2 and ROOM

Parameter	Description	Range	Visualization
IN	Inlet water temperature	-9 – 40°C	Detected temperature
OUT	Water temperature at the outlet	-9 – 40°C	Detected temperature
P1	Primary circuit temperature	-9 – 40°C	Detected temperature
P2	Secondary circuit temperature	-9 – 40°C	Detected temperature
ROOM	Environmental temperature	-9 – 40°C	Detected temperature

If no button is pressed within 5 seconds, the system automatically returns to its initial state.

3. STATUS MENU PARAMETERS PROGRAMMING

WARNING

To change the value of the status parameters, the heat pump must be in stand-by and not working.

Press the "SET" button once to display the 13 status parameter selection menu. **Use the "SET" button to view and scroll through the 13 parameters set in default and reach the field that you want to change (see** par. 4 - List of programming parameters).

The value is changed using the scroll keys (Up or Down Arrow).

To change the value of the desired temperature set point, simply use the scroll keys (0 cooling and 1 heating parameters).

<u>To modify the remaining parameters (from 2 to C) it is necessary to press the scroll buttons (triangle up and triangle down) at the same time. The digital controller will emit a beep, so it will be possible to change the parameter value again using the scroll keys.</u>

<u>Press "SET" in order to memorize the set value and pass to the next parameter</u>.

WARNING

Changing the factory default parameters is only possible when the pump is in stand-by. Changing these values must only be carried out by qualified personnel. It is recommended to act only on parameters 0, 1 and 8.

If no button is pressed within 5 seconds, the system automatically returns to the initial screen display.

4. LIST OF PROGRAMMING PARAMETERS

Parameter	Description	Range setting	Default value	Adjustment
0	Cooling temperature Cooling mode	8-30°C	12°C	Adjustment by load of the user
1	Heating temperature Heating mode	15-40°C	27 °C	Adjustment by load of the user
2	Total working time of the compressor after defrosting	30-90 MIN	40 MIN	Adjustment can only be carried out by a qualified technician
3	Start-up temperature setting of the defrosting process	0-30°C	-7°C	Adjustment can only be carried out by a qualified technician
4	Exit temperature from defrost mode in heating mode	2-30°C	13°C	Adjustment can only be carried out by a qualified technician
5	Time duration for exiting the defrost mode in heating mode	1-12MIN	8MIN	Adjustment can only be carried out by a qualified technician
6	Number of compressors per system	1-2	1	Adjustment can only be carried out by a qualified technician (the value is set on 2 only from model SBR 35 onwards)
7	Automatic restart	0-1	1	Adjustment can only be carried out by a qualified technician
8	Operating mode	0-3	0 - cooling only 1 - heat pump: all functions managed automatically 2 - Not available (electric heater auxiliary drive) 3 - heating only	Adjustment can only be carried out by a qualified technician
9	Cooperation mode with circulation pump	0-1	0	Adjustment can only be carried out by a qualified technician
A	Water temperature in automatic mode 3	8-40°C	30°C	Adjustment can only be carried out by a qualified technician
B	Return delta temperature setting (temperature delta)	1-5°C	2°C	Adjustment can only be carried out by a qualified technician
C	Offset temperature of the water at the outlet	1-10°C	0°C	Adjustment can only be carried out by a qualified technician

5. TIMER SETTINGS

In stand-by mode, press the "SET" button for 3 seconds and enter the setting mode of the clock, the hours will flash on the display.
Press "SET" once more and then set the number of hours using the scroll up and scroll down buttons.
Once the number of hours has been selected, press "SET" and move with the buttons scroll up - scroll down to set the minutes.
Then confirm by pressing "SET" once more.
If, on the other hand, no button is pressed within 5 seconds, the system automatically returns to the initial starting state.

6. START / STOP PROGRAMMED BY CLOCK

In stand by modality

Press for 3 seconds the button to enter in setting timer modality , with the writing of flashing hours

Press the button again to change the start time.
With the buttons scroll up - scroll down to move in order to select the desired number of hours and minutes.
Repeat the operation described above to adjust the minutes.

Then press the button again to be able to change the shutdown time.
With the buttons scroll up - scroll down to move in order to select the desired number of hours and minutes.
Repeat the operation described above to adjust the minutes.

Then press the "SET" button to exit the timed start / shutdown mode and return to the default state

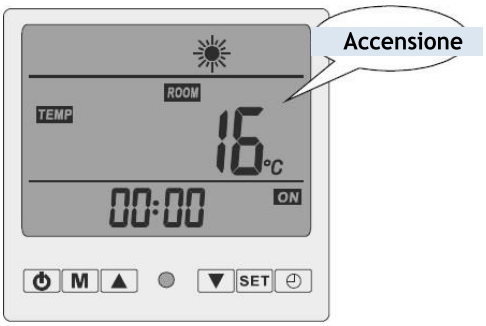

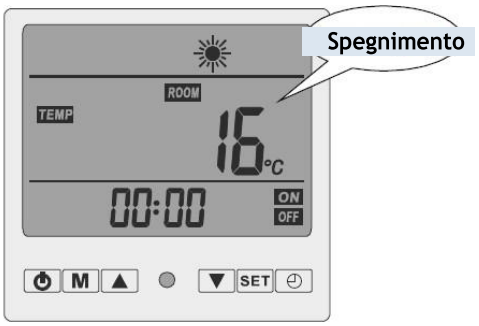

If no button is pressed within 5 seconds, the system confirms the current timing setting and automatically returns to the initial default state.

To reset the programming, press and hold the button until
the hour will flash, then press set to exclude the timer and return to the initial screen.

7. KEYBOARD LOCK

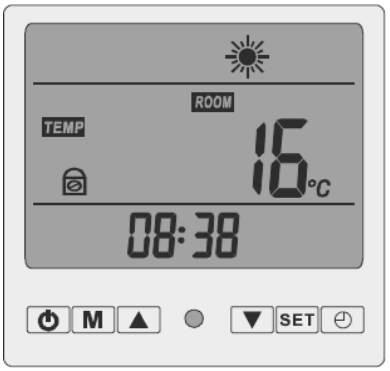

In standby mode, press the scroll, down arrow and up arrow buttons simultaneously for 3 seconds, and the keyboard will be locked.

When the keyboard is locked, press and hold the scroll, down arrow and up arrow buttons for 3 seconds, and the keyboard will unlock.

8. MEMORY BACKUP AFTER POWER RESUME

When the heat pump is running and the power supply is suddenly interrupted, the system, once powered up, will restart from the last mode set.

9. MAINTENANCE

Frequently check the hydraulic circuit and cleanliness of the water entering the device. Avoid dry running or the entry of air into the hydraulic circuit, which would negatively affect the performance and reliability of the unit.
It is advisable to clean the filtration system upstream of the unit regularly to avoid damage to it. Maintain a dry, clean and properly ventilated environment around the unit.
Clean the condenser regularly.
Check the power cable to see if you perceive a bad smell from the electrical component. If so, contact the installer immediately.
Please drain all the water present in the heat pump at the beginning of the winter period, for proper wintering of the device.
It is necessary to completely drain the water from the pump if the unit stops for a long time. After a period of standstill, before starting the unit again, completely fill the hydraulic circuit of the by-pass and the pump.

10. ALARM CODES

Malfunction	display Signal	Motivation	Solution
Errore della sonda di temperatura acqua in ingresso	PP01	Probe disconnected or faulty	Check or replace the sensor
Errore della sonda di temperatura acqua in uscita	PP02	Probe disconnected or faulty	Check or replace the sensor
Sensore circuito 1 guasto	PP03	Probe disconnected or faulty	Check or replace the sensor
Sensore circuito 2 guasto	PP04	Probe disconnected or faulty	Check or replace the sensor
Sensore temperatura esterna guasto	PP05	Probe disconnected or faulty	Check or replace the sensor
Temperatura dell'acqua in ingresso e dell'acqua in uscita troppo differente	PP06	Insufficient water volume, pressure difference too low	Check the volume of running water or the presence or absence of any blockages in the system
Prima protezione anti gelo	PP08	Ambient temperature too low	--
Seconda protezione anti gelo	PP09	Water temperature Too short	--
Malfunzionamento del sistema 1 (modello trifase)	EE01	System protection 1 has failed	Check each protection point of the system and remove any malfunction.
Protezione alte/basse temperature	EE01	Gas pressure of system too high or too low	Check the coolant pressure
Malfunzionamento del sistema 2	EE02	System protection 2 failed	Check each protection point of the system and remove any malfunction.
Sensore di flusso	EE 03	No water or insufficient water in the system	Check the volume of running water and if the pump is faulty or not
Connessioni alla corrente errate (per modello trifase)	EE04	Bad connections or lack of connections	Check up the connections
3 temperature differenti di protezione in 30 minuti per l'acqua in ingresso ed in uscita	EE05	Insufficient water volume, pressure difference too low	Check the volume of running water or the presence or absence of any blockages in the system
Protezione scarico compressore d'aria	EE06	Exhaust temperature of the air compressor too high	Check the flow of water
Sbrinamento	Defrost code		
Errore di comunicazione	EE08	Keyboard connections e of the PCB faulty	Check connections keyboard

11. PCB CONNECTION DIAGRAM

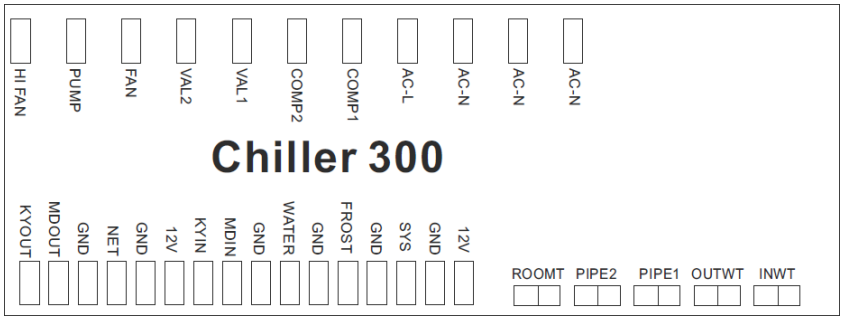

N°	Simbolo	Significato
1	HI FAN	For high speed fan
2	PUMP	Flow pump (220VAC)
3	FAN	Fan motor (220VAC)
4	VAL2	System 2 4-way valve (220VAC) (not used)
5	VAL1	4-way system valve
6	COMP2	System 2 compressor (220VAC) (not used)
7	COMP1	System Compressor 1 (220VAC)
8	AC-L	Active connection
9	AC-N	Neutral connection
10	KYOUT GND	On / Off sensor
11	KYOUT GND	Output mode
12	NET GND 12V	Keyboard
13	KYIN	On / off sensor
14	MDIN	Template
15	WATER GND	Flow sensor
16	FROST GND	Defrost signal (not used)
17	SYS GND 12V	System protection
18	ROOMT	External ambient temperature
19	PIPE2	Fan circuit 2 temperature (not used)
20	PIPE1	Fan circuit 1 temperature (not used for split version)
21	OUTWT	Leaving water temperature
22	INTWT	Inlet water temperature

12. CONNECTION DIAGRAMS

Version SBR-3.8H-B - SBR – 5.3 H-B - SBR – 9.5 H-B

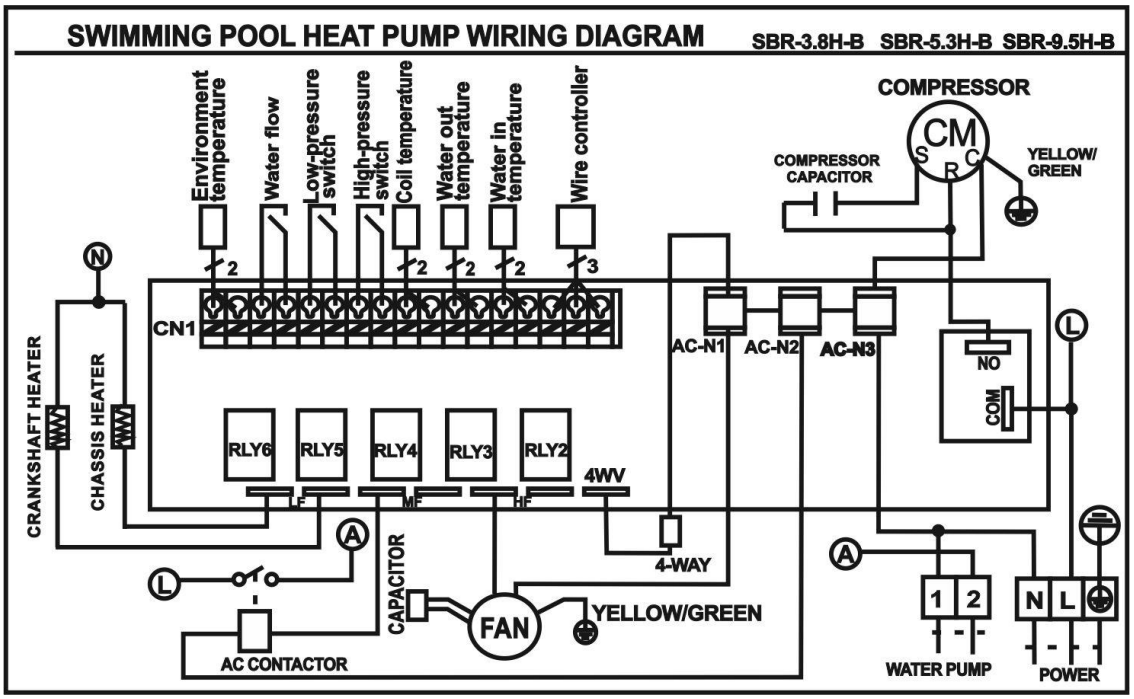

Version SBR-11.3H-B

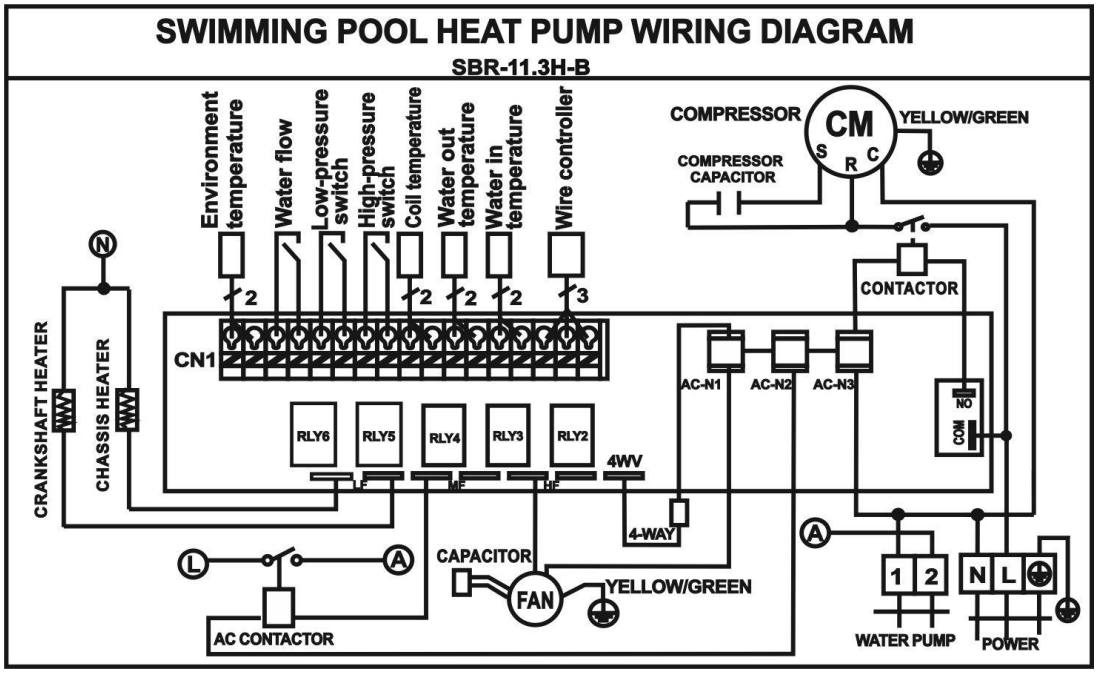

Version SBR-14.OH-B

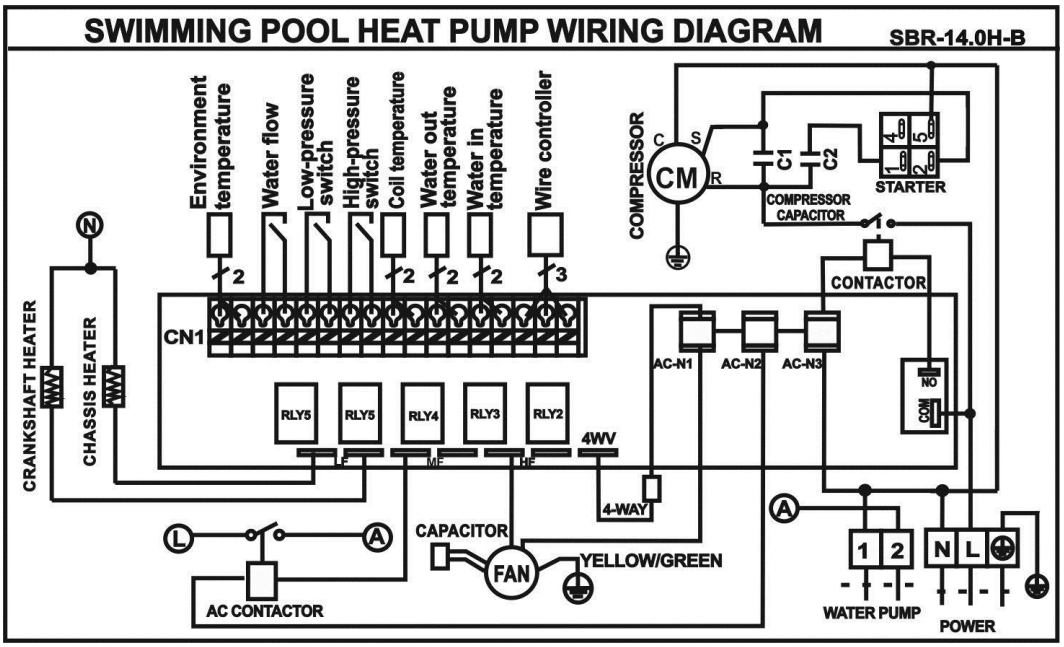

Version SBR-17.OH-B

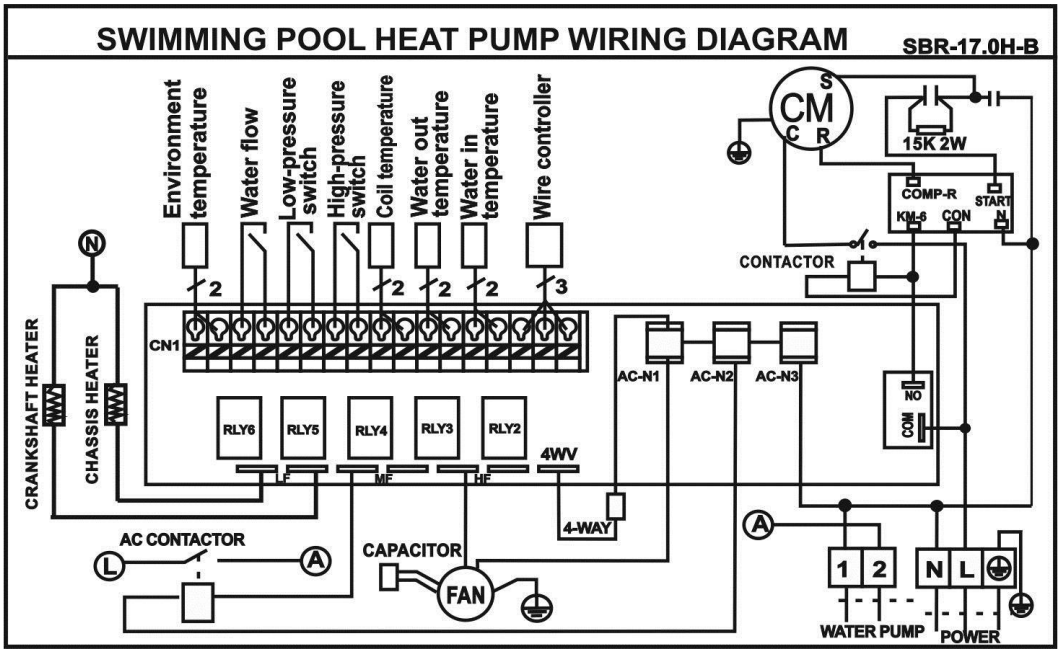

Version SBR 17.0H-B-S - SBR 21.0H-B-S - SBR 26.0H-B-S

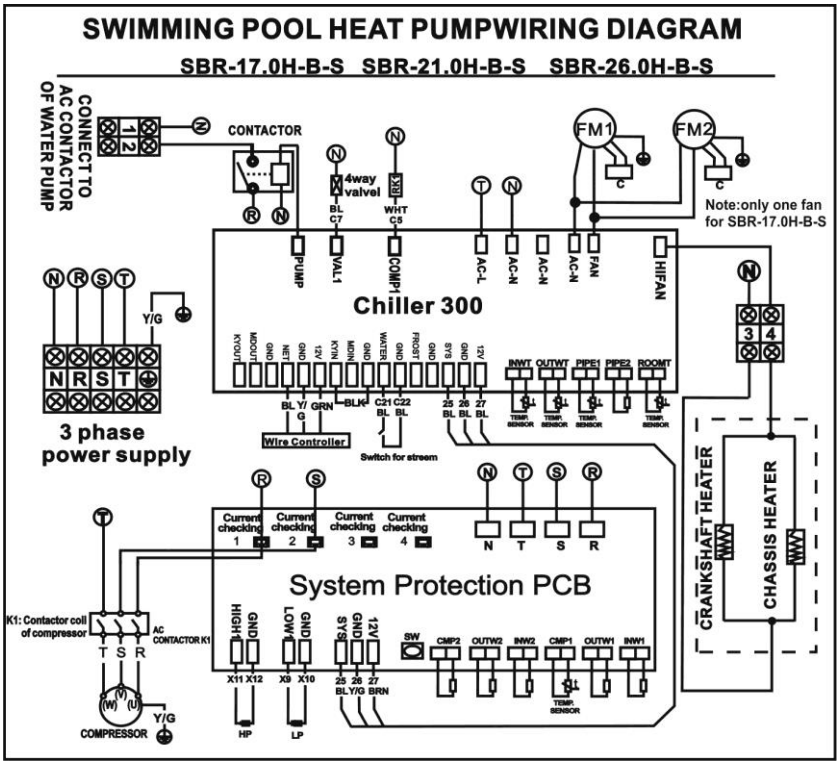

Version 45.AH-S

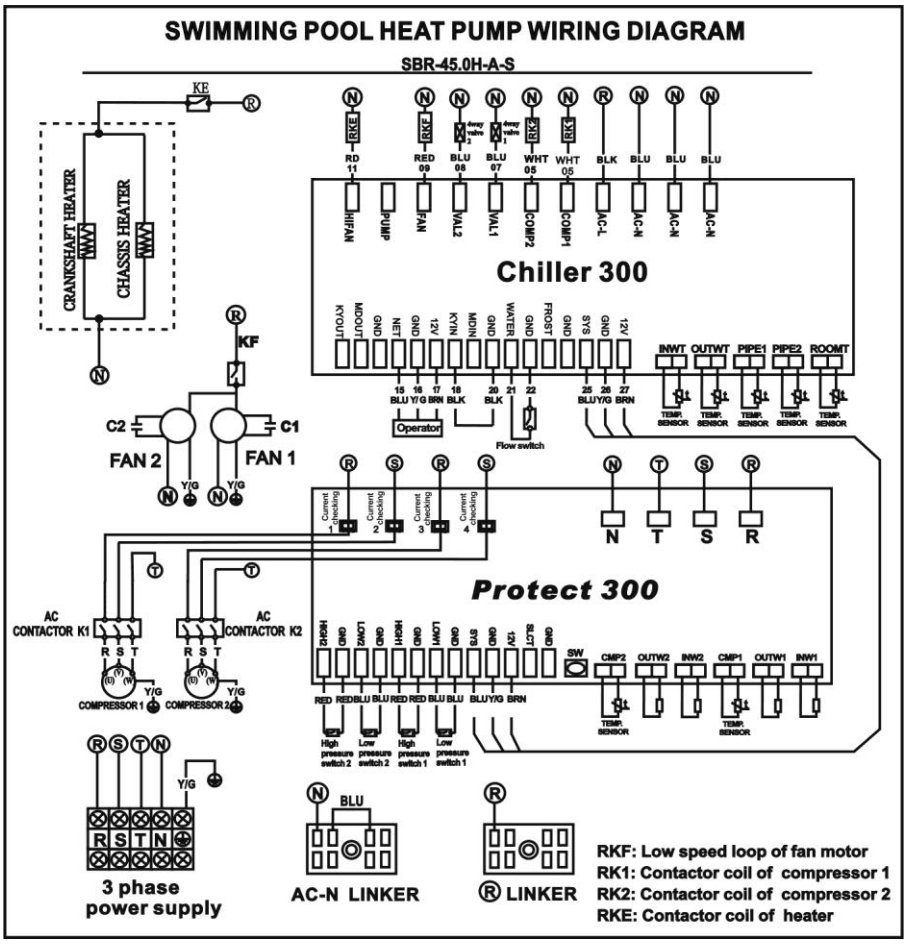

NOTA: Crankshaft Heater, seppur raffigurati, non sono attualmente disponibili

13. ERROR CODES

CODE	CAUSE
1	Anti-freeze protection coolant (not available at the moment)
2	Lack of protective coolant (not available at the moment)
3	Protection coolant pressure too low
4	High temperature protection for gas compression
5	Compressor overcurrent protection
6	High pressure refrigerant circuit protection
7	Inlet flow refrigerant system protection sensor (not available at the moment)
8	Outflow refrigerant system protection sensor (not available at the moment)
9	High temperature protection sensor for compressed gas
EE	Electrical protection - Power supply phases connection error (400 V devices)

1) Anti-freeze protection coolant (not available at the moment)
2) Lack of protective coolant (not available at the moment)
3) Refrigerant pressure protection too low: after 3 minutes from starting the compressor, the system checks the pressure of the refrigerant circuit, if the low pressure sensor is open the system enters protection mode (error code 3). When the system detects that the sensor contact has closed, the system exits the protection mode.
4) Protection from high temperatures for gas compression: after 5 minutes from the start of the compressor, the system detects the temperature of the gas circuit under compression, which if it turns out to be T3 ≥120 ° C enters the protection mode (error code 4) . If, on the other hand, T3 ≤ 90 ° C, the system exits the protection mode.

Note 1: the protections P1, P2, P4 are active only when the compressor related to the system is running. If the compressor is off, even if the temperature point is reached, the protection does not activate.

1) Overcurrent protection of the compressor: the system detects the compressor phases (phase 1 or 2) for three seconds. If current phase 1 (or 2) ≥ 1 the system enters the overcurrent protection phase (error code 5). If current phase 1 (or 2) ≤ 1, the system exits the overcurrent protection.
2) Protection from high temperatures for gas compression: the system detects the contact status of the high temperature safety sensor, if it is open the system enters protection mode (error code 6), otherwise it does not intervene.
3) Inlet flow refrigerant system protection sensor (not available at the moment)
4) Outflow refrigerant system protection sensor (not available at the moment)
5) High temperature protection sensor for compressed gas: the system detects the system temperature for 5 seconds. If the sensor is disconnected or faulty the system enters the high temperature protection mode (error code 9), otherwise it exits this mode.
6) Protection sensor for the power supply phases (not valid during the operation phase of the pump): Within 10 seconds of connecting to the power source, the system continuously detects the power supply phases for 2 seconds; if the phase is incorrect or there is a lack of phase, the system enters protection (error code EE). When this protection is active, the system cannot return to the normal phase unless the machine has been correctly reconnected to the power source (phase verification)

Note 2: The following error codes, high pressure protection E6, low pressure protection E3, overcurrent protection E5, gas circuit protection on compressor side E4, all indicate a serious malfunction: if the system error appears 3 times in 30 minutes, the system cannot return to normal operation unless the power is cut off and the problem is solved when the pump is re-connected to the mains.
During the defrost period, the high / low pressure protection system is not active

14. HOW TO OBTAIN ASSISTANCE

If you have any problems with your heat pump, please contact your installer immediately with the following information:

A) Serial number located on the product label

B) Purchase document

C) Description of the malfunction found

ATTENTION: Freon gas is very stable and does not degrade or be damaged. If your heat pump needs Freon and once it has been re-loaded the problem is not solved, it is very likely that there is a leak. Then locate the leak and repair it.

15. RECOMMENDATIONS FOR CORRECT INSTALLATION

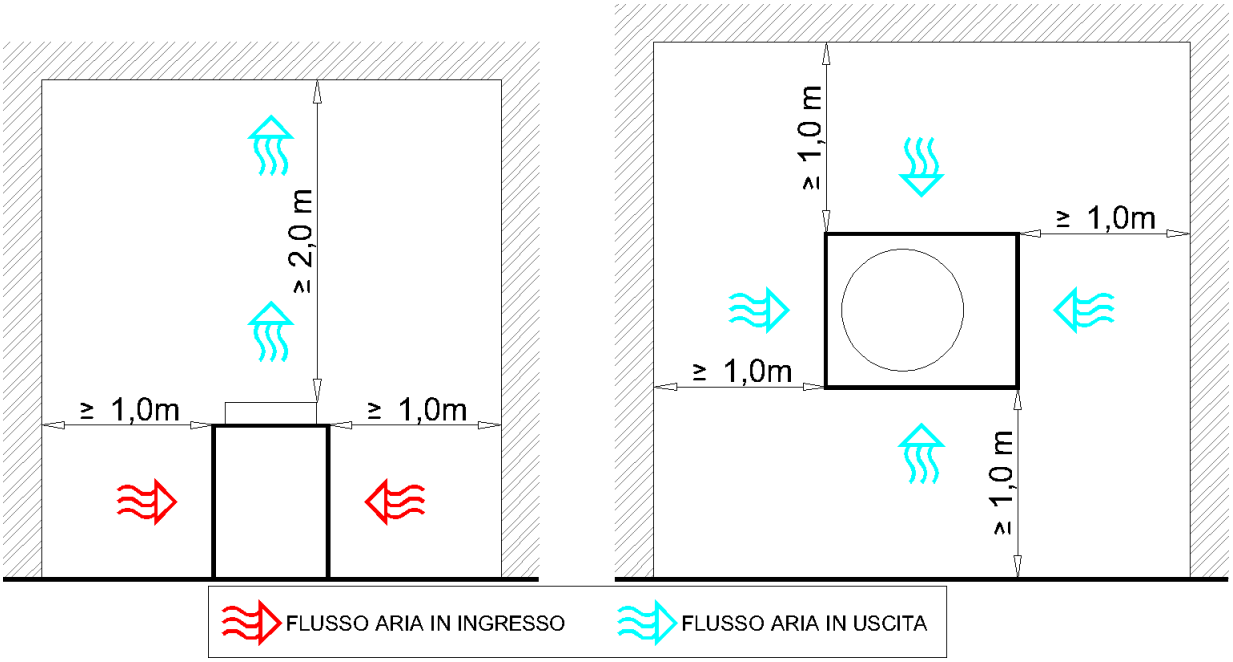

- The information contained in this document may vary at the discretion of the editor, without prior notice, together with the changes to the product in question in this document: it will be
- responsibility of the customer when placing the order to verify the persistent correspondence of the product to the information sheet.
- Any technical diagrams reproduced in this document have a purely informative value and are not valid for regulatory purposes
- All operations must be performed in a workmanlike manner and exclusively by qualified personnel in possession of the requisites required by current regulations.
- It is essential that the installation is carried out by competent and qualified personnel, in possession of the technical requirements required by the specific regulations on the subject. By qualified personnel we mean those people who have been authorized by the plant safety manager to carry out any necessary activity and in this being able to know and avoid any danger.
- This document does not in any way replace the technical documentation relating to the products indicated provided by the manufacturer of the same, to which the installer must contact in order to obtain all the technical information not present in the aforementioned document.
- The C.P.A. s.r.l. assumes no responsibility for any problems deriving from erroneous interpretation of the text.
- The C.P.A. s.r.l. furthermore, it declines all responsibility for possible inaccuracies contained in this manual, if due to printing or transcription errors.