eco SPARK®

Solar Pool Heating

Installation Manual

Models: eco-SPARK® 30

August 2012

TABLE OF CONTENTS

Table of Figures

PREFACE

ECO-SPARK® SOLAR POOL PANELS ARE MANUFACTURED UTILIZING STATE-OF-THE-ART TECHNOLOGY AND PRODUCTION TECHNIQUES. ECO-SPARK® COLLECTORS ARE SLEEK AND SIMPLE, YET THE **PATENTED OVERMOLDING DESIGN** MAKES THEM DURABLE ENOUGH TO LAST A LIFETIME. CORRECT INSTALLATION IS ESSENTIAL TO THE OVERALL SUCCESS OF THE SYSTEM. INSTALLED CORRECTLY, AN ECO-SPARK® SYSTEM IS PRACTICALLY MAINTENANCE FREE, AS IT TAPS SOLAR HEAT YEAR AFTER YEAR.

This manual contains easy, step-by-step instructions to help ensure that your installation meets our recommended standards. It also includes techniques and tips gathered from experienced contractors, to save you time and effort. An installation NOT conducted by an authorized dealer and according to the instructions detailed in this manual may void warranty!

OVERVIEW

eco-Spark® solar heating systems can be either mounted on a roof or on the ground with a blanket underneath. If a change of angle is necessary a special rack must be constructed.

Before installing the collector, please take the time to read the following instructions to ensure smooth and successful installation and operation.

Make sure you follow the safety and operation guidelines when installing Magen's eco-Spark® solar collector.

The general performance and energy savings that you can expect from your solar system will depend upon several factors: insolation, ambient temperatures, wind and the facility's characteristics.

SAFETY PRECAUTIONS AND REGULATIONS

Magen's solar collectors must be installed by an authorized installer. The installation work must conform to local authority’s standards and regulations. Consult the appropriate authorities or check with your local building department concerning local permits and requirements before you begin the job.

Electrical installation must be performed by an individual qualified in electrical installations, and conform to local regulations.

Warning! Always check that power is turned off before attempting any wiring or electrical hookups, especially when water is present.

Always exercise extreme caution, care and good judgment when working on or around a roof. Avoid hazards such as overhead electrical wires or loose shingles/roof tiles. Secure ladders so they will not slip or fall. Wear shoes with proper tread to prevent slipping on a ladder or slopped roof areas.

Always use approved lifting devices when installing solar systems at heights. All occupational health and safety issues must be adhered to.

Important: While this manual explains how to install eco-Spark® solar panels properly in typical situations; it cannot address all the possible individual cases. If you have any installation questions, contact your sales representative for assistance. As the installing contractor, you are responsible for fulfilling top quality standards when installing eco-Spark® panels.

Important: Avoid walking over the eco-Spark® collectors! Wherever possible, the system should be installed so that all parts of it are accessible.

Warning! Water in the collector can reach high temperatures (up to 90°C, 194°F)! Take caution while handling the collector to avoid burns.

Transport and handling

eco-SPARK® solar collectors must be secured during transportation to avoid damage to the packaging, and scratches to the collector's cover. Keep the marked side of the package up and consider it fragile.

Keep original package for storage in warehouse and for transporting solar panels prior to the installation. While in storage or when transported, up to 8 boxes can be stacked on top of one another.

Lightning protection

An authorized lightning protection specialist should be consulted to examine the required lightning protection measures required. eco-Spark® solar system is made from "all plastic" materials.

DEFINITIONS OF TERMS USED IN THIS DOCUMENT

Module – 39 individual tubes connected to 30 cm (1') wide manifold on both ends. Each module is encased in transparent multi-layer polycarbonate plate.

Panel – Four (4) modules welded to one another at the manufacturing facility. The collector absorbs the sun rays and transforms them into thermal energy.

PC Glazing – Durable Polycarbonate glazing with a UV blocking layer.

Differential Controller – An electrical device that operates the solar pump, according to a pre-set temperature difference between the collector temperature and the pool temperature.

Solar Pump – A pump that runs water to/from the collectors and the pool's filtration circuit. Operates according to the differential controller.

Vacuum/Air Relief Valve – A valve connected to the upper point of the solar system to release trapped air when the system turns ON, or to allow air into the system when it turns OFF.

MODULES/PANELS/BANKS

eco-Spark® collectors are manufactured as individual "modules", and connected together in the factory in groups of four modules to form "panels". You connect the supplied panels together to form "banks" of various lengths, depending on the individual requirements at your site.

An eco-Spark® solar pool heating system consists of one or more banks of collectors, connected to the swimming pool filtration system.

Module – Modules come in two lengths, always 30 cm (1') wide.

Panel – 4 Modules welded to one another in the factory.

Bank – a structure made of several panels joined together with Magen eco-Energy's (MEE) designated Plastic Pipe Connectors (PPC).

DIMENSIONS & SPECIFICATIONS

Model	Metric Units	Spark 40	Spark 30	US Units	Spark 40	Spark 30
M.E.E. Cat No.		1237111	1237108		1237111	1237108
Area	[m^2]	3.85	2.77	[ft^2]	41	30
Length	[cm]	323	231	[ft]	10.5	8
Width	[cm]	125	125	[ft]	4.1	4.1
Weight (empty)	[kg]	17	13.1	[lbs]	37	28
Fluid capacity	[l]	11.7	9	[gallons]	3	2.3
Weight (wet)	[kg]	28.7	22.1	[lbs]	63	48
Weight per area (wet)	[kg/m^2]	7.5	8	[lbs/ft^2]	1.5	1.6
Recommended flow rate	[l/h]	500-1000	300-800	[gpm]	2.2-2.4	1.3-2.0

MAXIMUM OPERATION PRESSURE

The collectors are designed to operate under a maximum pressure of 4 bar/60 psi.

PRESSURE DROP

The pressure drop of 1 collector is 0.05 bar/0.72 psi (in a recommended flow rate of 500 l/h | 2.2 gpm).

WIND AND SNOW LOAD

When properly installed, the collectors can withstand uplift wind pressure or snow load of at least 1000 Pa.

DESIGNING YOUR SYSTEM

This chapter describes the factors you need to take into account when designing your system, and the process planning of the systems' structure.

During all stages of the design and construction keep in mind that you want to produce a system for the customer that will be as efficient and as AESTHETICALLY PLEASING as possible.

THE SOLAR SYSTEM LAYOUT

The first thing to do is determine the location of your solar heating system. The following factors must be taken into account.

COLLECTOR AREA

The total panel area must be large enough to heat the pool efficiently. In addition to the pool's surface area, the exact optimum size depends on many factors such as: solar radiation intensity, climate, latitude, roof orientation, slope, winds, pool cover (at night), pool volume and shading.

An approximate "rule of thumb" is to allow for a collector area equal to 60% of the pool's surface.

PROXIMITY TO POOL

The panels need to be as close to the pool as possible to reduce heat loss in the plumbing and eliminate the need for an additional pump.

LOCATION & ORIENTATION

Ideally the collectors should be mounted on a flat or tilted roof or on an elevated ground mounted rack, facing south (in the North Hemisphere). Where necessary, East facing or west facing roofs can be used (in that order of preference). If you have to mount collectors on a north facing slope, it is recommended to construct a reverse rack.

Tip: For ideal self-cleaning of the glazing it is recommended to install the collector at a **minimum** angle of 15^0.

How to locate the collector on the selected roof? The lower side of the collector is the side where the Stoppers are connected. Stopper (Cat Num. 1233160) is attached to the edges of every single module (8 in total) and mounted to the unglazed tubes. The stoppers eliminate the possibility of the glazing moving due to thermal expansion/contraction and contribute to the collectors' strength and stability.

IMPORTANT: A collector should be installed so the stoppers are located on the lower part of the collector. A system that will be installed differently will function less efficiently.

TILT

Be sure the planned position of the collector panels allows for them to drain naturally when the pool pump shuts off.

Tip: The “ideal” angle for maximum solar collection should be similar to the local latitude or up to 15° higher. However, any angle that allows for self-drainage of the panels is sufficient.

Important: Mounting the solar panels in certain locations, and/or constructing a support structure (if necessary) may require a building permit. Consult with the appropriate authorities, or check with your local building department, about permit requirements and codes that may apply, before you begin work.

PREPARING A SCHEMATIC DIAGRAM

Once you have decided on the location for the panels, prepare a schematic diagram of the system you wish to construct, taking into account the collectors sizes available.

1. Fill in the "Site evaluation sheet” at the end of this document. This will help you decide on the best system for your site.
2. Prepare a schematic drawing of the installation area. Include the proposed location of the feed and return lines.
3. Use the panel dimensions on page 8, to sketch the system you will construct.

Important: Large scale or commercials systems must be designed by a professional engineer.

Tip: Roof areas often give the impression of being bigger than they really are, so be sure to actually MEASURE the available area before making your drawing.

Note: Where possible construct your system using panels of the same length (if possible the largest length). In cases where space limitations do not allow for a complete panel, individual modules can be ordered. Modules can then be connected to one another or to panels in exactly the same manner that panels are connected to each other. Use individual MODULES only if essential.

SAMPLE COLLECTOR SYSTEM

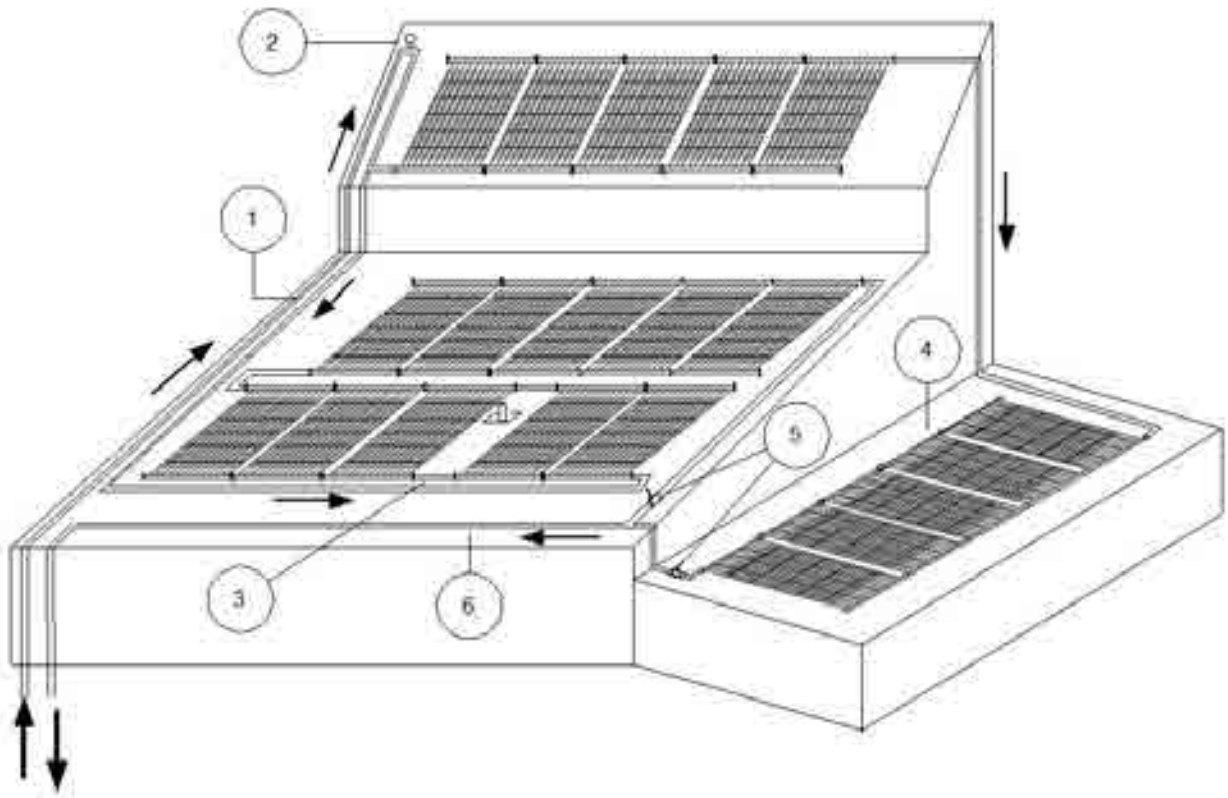

Figure 1: Sample collector system

Note: example illustrated above does not allow for natural water drainage and is not suitable for colder regions with freezing conditions.

1. Feed line climbing to far point from pump house.
2. Air release valve at highest point (optional).
3. CPVC/PPR/PEX pipe connecting across a large obstruction
4. Flat roof
5. Balance valves in the return line.
6. Return line as short as possible, made of high temperature resistant pipe.

Note: Full details of how to connect the supply and return pipes are given on Page 33.

MOUNTING RACKS

Important: The collector must be supported and lying on a rigid surface. It is not a self-supported unit.

Wherever the system is installed, both headers should be elevated 2.5 cm (1") to 5 cm (2") above the roof/ground, by using stainless steel/wooden profiles. For roof types that might be affected by the heat radiating from the collector an additional metal/wooden profile should be installed under the binders. The metal/wooden profiles prevent the collector from coming in direct contact with the roof.

In all installations a minimum of two metal/wooden profiles must be installed as instructed above, to keep the breathing holes (which are located on the lower surface of the sealing panel) constantly open. This will eliminate the possibility of water ingress into the glazing.

Where there is no roof space, you may need to construct a rack to mount some or all of the eco-Spark® panels. The rack must provide a STABLE base for the panels to be secured to.

When designing a mounting rack the following considerations should be taken into account:

- The tilt of the rack should be as near as possible to the latitude of the location, to provide optimum solar collection.
- The tilt of the rack must be sufficient to allow the collectors to drain naturally when the pool pump shuts off as well as for self-cleaning purposes (at least 15^0).
- When calculating the area for the rack, take into account that collectors expand and contract due to temperature changes under normal working conditions. Allow for additional 10 cm (4'') length per collector.
- Allow room on the rack for the supply and return plumbing and plumbing between collectors and banks.
- The mounting rack must be stable, and able to support the weight of the collectors when filled with water, which is up to $8kg/m^2$ ($1.6\ lbs./ft^2$).

Figure 2: Sample mouting rack

Note: Whenever solar collectors are installed on a rack, a substrate should be mounted on the rack prior to mounting the panel. This eliminates heat loss and stress created by wind blowing on the back and sides of the rack.

IMPORTANT: Some local building codes require that the rack construction be approved by an authorized engineer. Please conform to local building codes and regulations in your region!

PARTS AND TOOLS

Once you know the layout of your solar collector system, and how many panels/modules you require, this chapter will help you calculate which eco-Spark® panels and other fittings you will need to complete your installation.

This chapter deals with the following three categories:

- eco-Spark® fittings and accessories
- Other fittings
- Tools

Description	Cat. Number	Picture	Box
PPC SET + Lock	1202320		400
Pipe adaptor	CPVC [mm] – 420910E CPVC [inch] – 4209100 Polypropylene [mm] –1204000 Polypropylene [inch] –1204100 Polyethylene [mm] –1205000 Polyethylene [inch] –1205100		100
End Cap	1202600		100
Binder (top & bottom)	1202130		Assembled on panel
Stopper	1233160		Assembled on panel
Roof mounting pad set	1203100		76
Air/vacuum relief valve Vacuum relief valve	1201400 1201410		12
Controller + 3-way-valve set	4201563		1

FITTINGS AND ACCESSORIES

This section summarizes the four basic types of connections to and between eco-Spark® panels, using eco-Spark® fittings.

CONNECTING BETWEEN PANELS/MODULES

To connect one panel to another or a panel to a module, you need a PPC connector set. This consists of a clamp top and bottom, a rubber gasket, a latch and a latch lock.

When connecting two panels together you need two PPC sets (Cat Num. 1202320), one to connect the upper manifolds and one to connect the lower manifolds.

Tip: To ensure comfortable assembly, soak top and bottom PPC for 24 hours before installation.

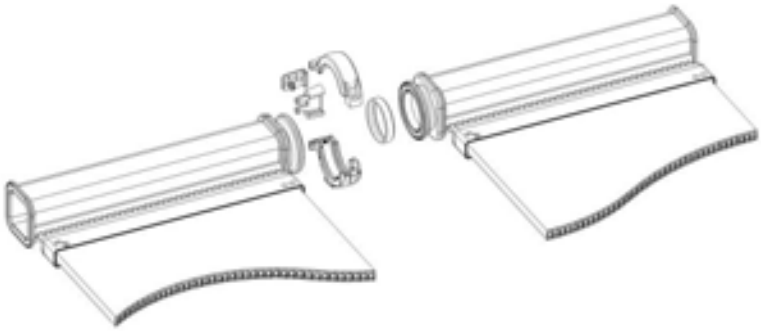

Figure 3: PPC (Plastic Panel Connector) Set

ENDS OF A BANK

When all the panels/modules in a row are connected together you will have four open ends. Two of these will be connected to the supply and return lines, the other two will usually be blocked with end caps.

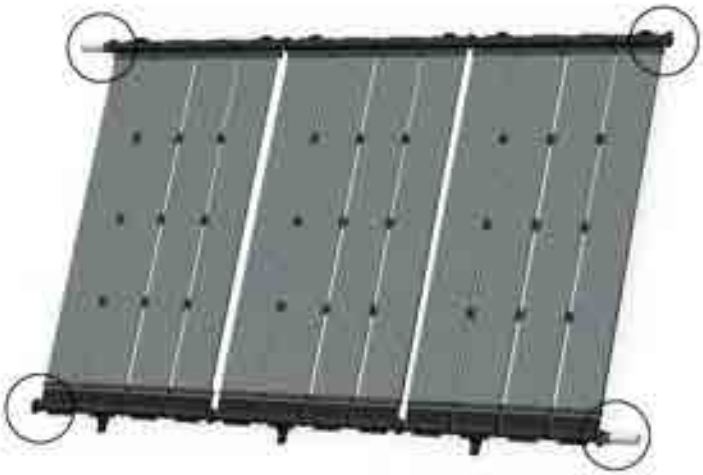

Figure 4: Ends of a bank

For each bank you will require:

2 end caps (1202600), and

2 **pipe adaptors,** made from the same material as the pipelines.

Each of the fittings above is connected with a PPC.

SECURING PANELS TO THE ROOF

Panels are secured to the roof using S Roof Mounting Pads (Cat. Num.1203100). As a general rule of thumb allow 3 pads per panel, 2 at the upper end and one at the bottom. For steep roofs or windy regions, use 4 units per panel, 2 at the upper end and 2 at the lower end.

ECO-SPARK® FITTINGS SUMMARY

Table 1: Summary of eco-Spark® fittings required

*** Make sure that the Pipe Adaptor is made from the same material as the chosen pipelines; otherwise the connection will come apart.**

	S Roof Mounting Pads	PPC Connectors	* Pipe Adaptor	End Caps
For each panel	3-4	-	-	-
Between 2 panels	-	2	-	-
Between 2 panels across obstruction	-	4	2	-
For each bank ends	-	4	2	2

PIPES AND OTHER FITTINGS

This section deals with pipes and other fittings you will need, that are not supplied by Magen eco-energy.

PIPES

Use only pressure rated pipe with temperature resistance of up to 90 °C (194°F). Make sure that the pipes are UV resistant where subjected to UV radiation, otherwise use UV protection or a cover. For open loop installations use only pipes that are certified for drinking water contact. Optional pipe materials are: CPVC, PEX, PPR.

FITTINGS

Use only pressure and high temperature rated fittings to match the selected pipes. Connections must follow manufacturer instructions and training if necessary.

Important: Do not use “plumbers” fittings or DWV fittings (Drain, Waste and Vent). Use a quality brand name product and follow the manufacturer’s directions for use on the product label.

Important: If you cannot obtain black pipes & fittings, and wish to spray paint the fittings black, be sure to use high quality paint, preferably with UV inhibitors.

OTHER FITTINGS

Depending on your specific job, you will need various other plumbing items and materials such as: Valves, stainless steel lag bolts, silicone or polyurethane caulk, silicone spray, galvanized pipe straps, black electrical wire ties, electrical wire nuts, 18ga-22ga sensor wire, 14ga-16ga electrical wire with ground, Teflon tape, concrete anchors and screws, electrical conduit, etc. Be sure to use quality products that will withstand direct sun radiation for many years.

Additional parts you may have to include are:

- Air/Vacuum relief valve
- Check valve
- Ball valve
- T-joint
- L-joint
- 3-way valve/ Automatic control
- Pipe reductions, bushings, sockets

TOOLS

Standard tools and materials that are useful to have when installing an eco-Spark® systems are:

• Basic toolbox
• Chalk
• String
• Electric wire (to connect to automatic control)
• Cable for sensor
• Measuring tape
• Flat head and Phillips head screwdrivers

• Channel lock pliers
• Power drill with bits
• Caulking gun
• Pipe cutter or hacksaw
• Ladder
• Garden hose
• Hand saw
• Chisel

HYDRAULICS

This chapter deals with the hydraulics that demands consideration before installation.

PANEL CONFIGURATIONS

Before you can start constructing the system you have designed, you must consider how the banks will be connected together. You must also take into account the maximum number of panels allowed per bank, as shown below.

Table 2: Maximum number of panels allowed per bank

Panel type		Max. bank size
SPARK-30	(4'x8') - Cat. 1237108	12
SPARK -40	(4'x10.5') - Cat. 1237111	10

These numbers may be exceeded if there is high-pressure flow or substantial back pressure on the system that will force adequate flow through every panel. In other cases you should divide the bank into two using one of the following configurations.

Banks in parallel can also be used for smaller installations, when space is limited.

Important: Large scale or commercials systems must be designed by a professional engineer.

BASIC PLUMBING & ARRAYS LAYOUTS

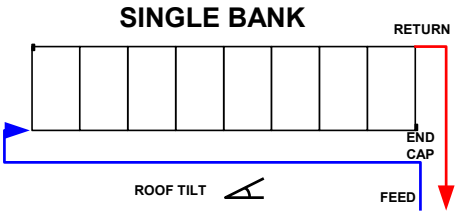

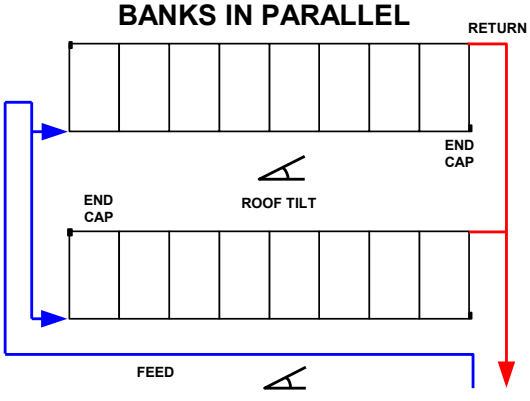

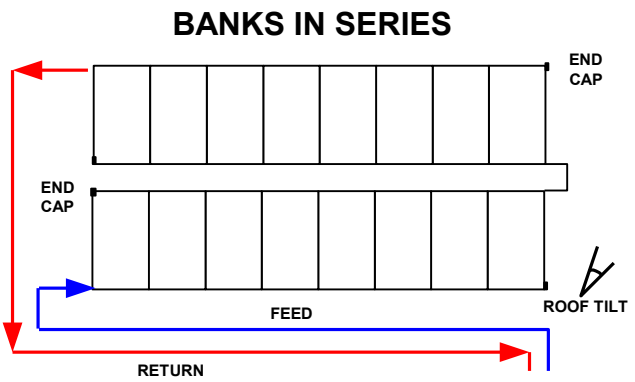

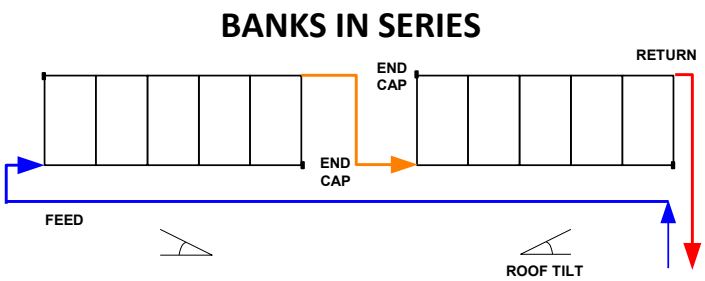

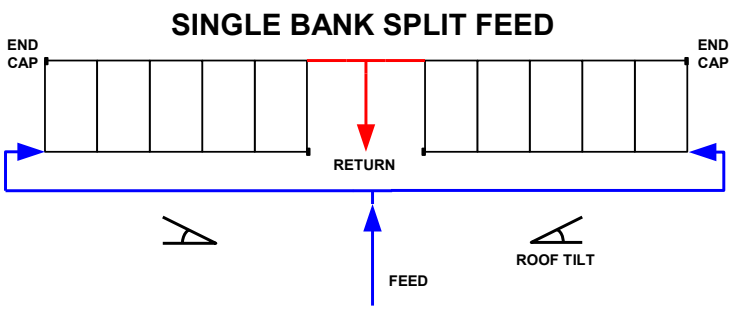

PLUMBING

WATER INLET /OUTLET

- Inlets are always connected to a lower end of the bank; Outlets to the opposite upper corner (diagonally).
- It is best to connect the inlet to the corner farthest from the pool, so that the outlet can be as near the pool as possible, to reduce heat loss.
- Using the “Reverse return” (Tichelmann) method would ensure balanced flow in all collector banks.

PIPE DIAMETER

It is important that all plumbing connected to the system uses a diameter of pipe appropriate to the size of your solar array. Insufficient pipe diameter will unnecessarily restrict water flow to the panels. Use the following as a guide:

Table 3: Recommended pipe diameters

Flow Rate	Recommended pipe diameter
0 - 9 m^3/h (0 – 40 gpm)	50 mm (2'')
9 -15 m^3/h (40 – 66 gpm)	63 mm (2.5'')
15 - 21 m^3/h (66 – 92 gpm)	75 mm (3'')

For larger flow rates you may need to incorporate alternative series-plumbing techniques.

PLUMBING RUNS

- Plumbing runs should be as short as possible, especially the "Hot Return" pipe (to minimize heat loss).
- Pipes should be supported every 1.2 m (4') for horizontal pipe runs or 2.5 m (8') for vertical pipe runs to prevent sagging and movement.

Tip: Since 90° elbow fittings greatly restrict water flow, use as few of these as possible. In some cases two 45° fittings can be used in place of a 90° fitting.

Tip: When clamping pipes that run across the roof, use clamps that allow for expansion of the pipe in hot weather. For very long pipe runs, expansion fittings may be employed. See manufacturer for recommended size, spacing and techniques for installation.

Tip: When clamping pipes on the side of a building use clamps with a diameter equal to the pipe diameter, to prevent vibration and to assure a professional looking installation.

BALANCED FLOW

If you install a split system (feed), such as one of those shown in the former page, it is essential that the piping is connected exactly as shown, to ensure equal water flow through both banks of panels. Water follows the path of least resistance, so if one plumbing run is shorter, more water will flow through it than through the longer one. This should also be kept in mind when designing a panel layout different to those shown. For larger, more complicated configurations "balancing valves" may be necessary to maintain equal water pressure in all parts of the system.

PUMP POWER

The power of the swimming pool filtration pump must be adequate to supply the eco-Spark® system with enough flow & pressure to provide the recommended parameters. These recommended rates are detailed in the table below:

Table 4: Recommended flow rate through the panels

Panel type	Recommended Flow per Panel		
Spark-30 (4'x8') 1237108	>300	lit/hr	(>1.3 gpm)
Spark-40 1237111 (4'x10.5')	>500	lit/hr	(>2.2 gpm)

For example: If you were installing ten eco-Spark-40 (4'x10.5') panels installed in parallel, your pump would have to be able to deliver >5000 liters/hr (22 gpm) to the solar array. These recommended flow rates may be exceeded by as much as 100% without any detrimental impact on the performance of the system. The existing pool filtration pump is usually adequate only for circulating the water and not for running the water through the solar system.

Generally, a 1 horsepower pump (0.75KW) is sufficient for a standard private pool solar system, unless there is an unusually long pipe run, a high roof, or a large number of panels. If you are not sure what your pump flow rate is, consult your Dealer or Pump Manufacturer for the pump's flow characteristics.

AUTOMATIC DRAINAGE

The panels and the pipe must be installed so that the water drains out of them when the pool pump shuts off. This is especially important in areas where freezing occurs.

To allow for drainage, a vacuum breaker (marked as # 5) is installed on the solar feed line above the 3- way valve, as shown in the drawing on page 34.

Important: eco-Spark® solar pool panels are NOT warranted against internal freezing. To avoid damage install the collectors in a manner that allows for automatic draining.

COMPENSATING FOR LACK OF AUTOMATIC DRAINAGE

If, due to unusual roof design, flat roof or pool equipment location, it is not possible to achieve complete automatic drainage, manual drain down valves must be installed in appropriate places in the plumbing, or at the end of the bottom (feed) header.

Instead of installing an End Cap at the end of the header, place an Air/Vacuum relief valve (Cat. Num. 1201400) along with a ball valve for manual drain. These valves should be opened when the system is being shut down for the winter months or when outdoor temperatures approach freezing point.

Reminder: eco-Spark® system is not resistant to temperatures below freezing point.

INSTALLATION

This chapter describes four basic installation processes:

- Connecting panels together
- Securing panels to the roof (sloping or flat)
- Connecting panels to piping

Tip: It is highly recommended to visit the site BEFORE installation day. Inspecting the site after you have planned the installation layout is of great help in foreseeing and solving possible problems.

CONNECTING PANELS TOGETHER

Tip: To ensure comfortable assembly, soak top and bottom PPC for 24 hours before installation.

1

Lay the two panels side by side with the panel spacer bars facing down. Place a PPC connector (top, bottom, gasket, latch & latch lock) at both ends where the headers meet.

2

Clean the groove of both headers and dry them.

3

Insert the gasket (O-ring) into the groove of one of the headers.

4

Connect the two headers by inserting the rubber gasket (O-ring) into the opposite header groove and fitting the ends of both headers into the PPC (plastic panel clamp).

Important: Make sure that the gasket sits snugly in the grooves of both headers, and is not squashed or pinched between the headers, as this could result in leaking.

5

Place the bottom half of the PPC under the header end of the larger, flat portion facing *away* from the panel.

6

Interlock the tab in the top half of the clamp with the hole in the bottom half (120210B), swing the top half (120210T) round over the headers.

7

Notice that the latch and latch lock are connected (PPC Latch Set - 120231P). Gently disconnect the two parts from the small plastic bit holding them together. Discard the small piece and keep both the latch and latch lock nearby.

8

Use channel lock pliers to close the clamp together.


9

Lock the two halves of the clamp together using the latch (120211P). Do this by sliding the wide end of the cone shaped latch over the thin end of the PPC assembly. Use Channel lock pliers to tighten the latch grip by squeezing it with moderate force until you hear a 'click' sound and it seats flush so it cannot slide out of its position. Move your finger over the wide end of the latch to make sure it is in fact flat. This will confirm that it is positioned securely.


10

Take the latch lock and tilt it so the lock's gripping teeth are positioned inside the groove of the latch. Gently press downwards into position until you hear a 'click' sound or the latch lock is flat against the latch.

11

If you wish to dismantle the PPC Set, strongly pull the latch lock upwards while your thumb is holding the flat part of the latch or use a flat-head screwdriver. Gently insert the flat-head screwdriver under the lock and gradually pull upwards until it is released from place.

If the latch lock is in good conditions it can be used again. The gasket (O-ring) will be better replaced anyway.

CONNECTING ACROSS A LARGE OBSTRUCTION

For obstructions, you need to bypass the obstacle using extension pipes between the manifolds.

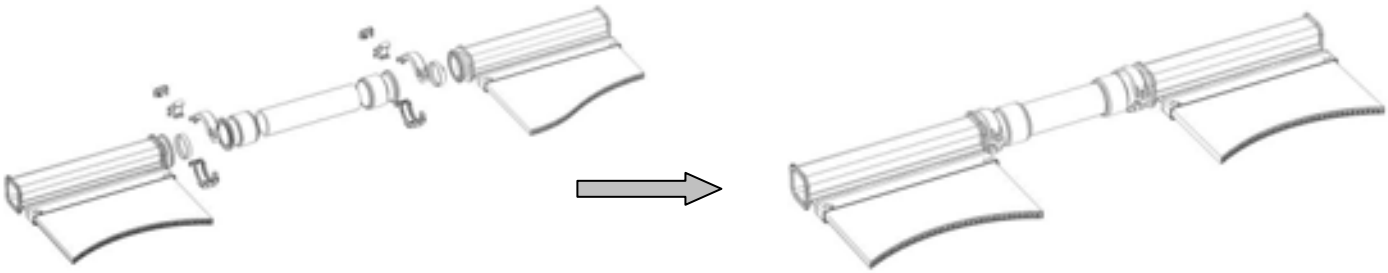

Figure 5: Connecting across an obstruction

When connecting two panels/modules together across a large obstacle you need:

- 4 PPC sets
- 4 pipe adaptor
- 2 lengths of pipe cut to the required length for both top and bottom header.

FIXING PANELS TO A SLOPING ROOF

S Roof Mounting Pads are used to secure panels to the roof or rack. The following considerations apply:

- Top S Mounting pad (Cat. Num. 1203105) can be fitted to the panel along the track of the upper manifold header.

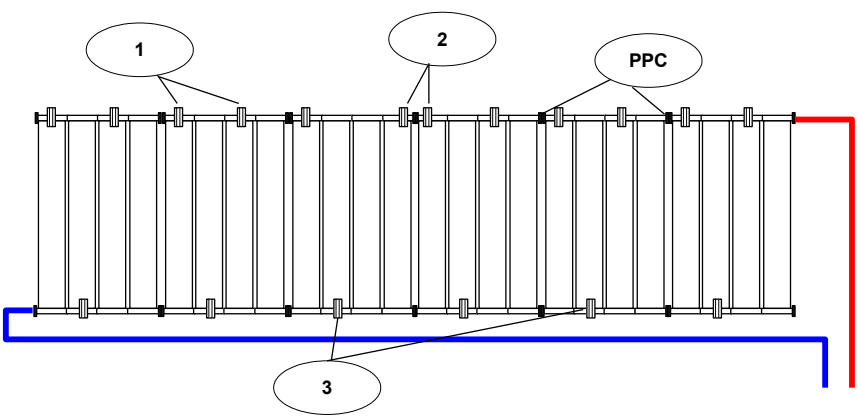

Figure 6: Mounting with S Roof Mounting Pad Set

1. In general, use two (2) top S roof mounting pads on the upper header of each panel, and one (1) for the lower header. On roofs with a pitch greater than 30% or windy regions you need two (2) top S roof mounting pads on the upper header and two (2) bottom S roof mounting pads on the lower header.

2. It is recommended to lock the center of each bank in place, so as to spread thermal expansion and contraction evenly between both sides. To lock the center panel of a bank, position the mounting pads on that panel adjacent to the left and right of *one* of the header ribs. Attach with a lag bolt.

Important: Never "lock" more than one position on a bank, as this could result in damage to the system due to thermal expansion and contraction.

MOUNTING PANELS USING S ROOF MOUNTING PADS

1 Draw a chalk line across the roof or rack indicating where you want the top edge of the collectors to be located.

2 Position a stainless steel/Anodized Aluminum or wooden profile across the line you just marked and drill it into place. Apply adequate sealant to prevent leaks to the roof. This will ensure the panels' breathing holes are open, eliminating the possibility of water ingress into the glazing.

Note: Since the panels should slope slightly down toward the feed end of the array, for proper drainage, the chalk line should also slope down in this direction, approximately 2cm per 5m (1" to 2").

3 Thread all Top S Mounting Pads on the track of every second module **(two for each collector)**

4 The remaining Top S Mounting Pads should be spaced out evenly along the chalk line, approximately every 60 cm (2').

5 Screw the Top S Mounting pads to the profile.

6 Thread the bottom S Mounting pads into the headers and connect them to the profile. Pay attention to the ambient temperature and position the slider over the track and grid closest to the graphic mark that best describes the weather accurately.

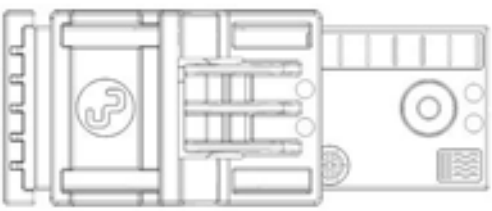

7 Each graphic mark on the bottom S roof mounting pad refers to a possible weather condition: "snowflake" for cold and "heat waves" for hot. During installation the ambient temperature should be considered. Position the slider part over the track (and the grid), so it is closer to the icon that best defines the weather. This will allow enough room for the system to expand and contract as needed.

8 In windy regions add strength to the installation by screwing down the binders to another metal/wooden profile.

9 Once all mounting pads are properly lagged to the rack or roof surface, and all the collectors are hung in place, join the upper headers together with PPC connectors as described in page 21.

10 Verify that all lag bolts are secured and that adequate sealant has been used to prevent any roof leaks where they are attached. Ensure that all four corners of the bank are securely fastened to the roof.

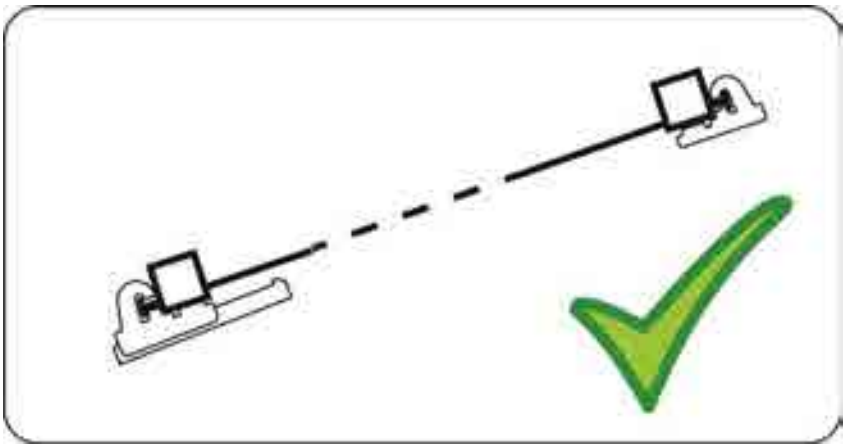

Figure 7: Correct installation of S Roof Mouting Pad Set

Important: Position the Slider over the track and grid on the bottom S mounting pad according to the current ambient weather. Allow enough room for the system to expand and contract as needed. Improper installation might cause damage to the collector or the roof!

Tip: It would be advisable to install both headers 2.5cm (1") to 5cm (2") above the roof/ground, by using a stainless steel metal/wooden profile in order to keep the breathing holes (which are located on the lower surface of the sealing panel) constantly open to eliminate the possibility of water ingress into the glazing.

FIXING PANELS TO A FLAT ROOF

If you are mounting your solar panels on a flat roof, it is recommended **not to penetrate** the surface with a lag bolt, to avoid rain penetration through the roof. In high wind areas, seek the advice of a design engineer for attachment recommendations.

Where there is freezing danger during the winter - it is recommended elevating the return manifold header using a piece of wood/ cement/ plastic in order to enable water to drain from the system.

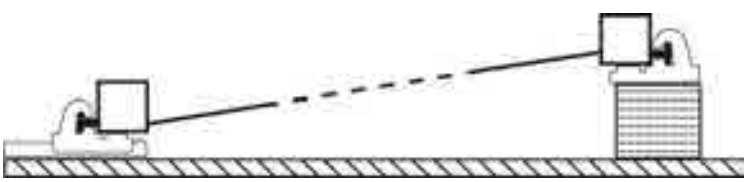

Figure 8: 4'x4' wooden rail section

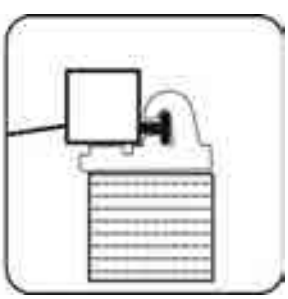

PIPES CONNECTIONS - CPVC CEMENTING

Important: Pipe Adaptors must be made from identical material as the pipelines; otherwise connections will not last long and will shortly dismantle.

Part	CPVC pipe adaptor (mm)	CPVC pipe adaptor (inch)
MEE Cat. Num.	4209000	4209100

Part	PPR pipe adaptor (mm)	PPR pipe adaptor (inch)
MEE Cat. Num.	1204000	1204100

Part	PEX pipe adaptor (mm)	PEX pipe adaptor (inch)
MEE Cat. Num.	1205000	1205100

Remember to consider pipelines units –metric or inch

CPVC CEMENTING

Important: When gluing CPVC fittings to CPVC pipe, such as the eco-Spark® pipe connector, make sure to you are using good quality CPVC cement and primary cleaner.

1 Before applying the cement, be sure to clean the contact areas with the CPVC cleaner or “primer”.

2 Immediately after cleaning, apply cement first to the fitting and then to the pipe end.

3 Insert the pipe end into the fitting with a slight twisting motion so as to spread the glue evenly, and seal the joint.

4 Hold it in position for 5–10 seconds (longer when ambient temperatures are low) to allow the cement to set slightly. Wipe away any excess cement.

Tip: By taping the cans of CPVC cleaner and CPVC Cement together you can reduce the risk of them tipping over and spilling.

PIPES CONNECTIONS - PEX WELDING

PEX WELDING (USING PEX2PEX ELECTROFUSION COUPLERS)

Electrofusion is a method of joining various types of pipes (PEX amongst them) with special fittings that have built-in electric heating elements which are used to weld the joint together.

Important: Electrofusion must be executed by trained personnel only!

1 Cut the pipe to the required length.

2 Clean the edges of the pipe.

3 Measure and mark the length of the part you will be using.

4 Mark the area that will require scrapping.

5 Scrap the area until the lines you just marked disappear.

6 Mark how much of the pipe should be inserted into the part you are using.

7 Clean the edges with Alcohol.

8 Insert the pipes into the connector

9 Fix the pipes into the fitting. Hold it in place using designated support, attach the wires and weld. When the machine indicates that the welding is terminated, gently disconnect the wires. Don't dismantle the support until you allowed enough cooling time.

PIPES CONNECTIONS - PPR WELDING

1 Before welding the pipes, be sure to clean the contact areas thoroughly. Attach both the PPR pipe and the high temperature pipe adaptor to the machine.

2 Hold firmly until both ends are sufficiently warm.

3 Once both ends are hot and melted, quickly disconnect them from the machine.

4 Swiftly join both ends and hold for a number of minutes until the weld is strong and firm.

5 Connect the newly welded pipe to the panel using a PPC Set (as instructed in page 21).

CONNECTION TO EXISTING EQUIPMENT

This chapter describes the standard (and most common) method of running the pipelines from the feed and return lines to the existing ground level equipment. Some installations may require a more creative approach.

Whenever possible, the return line should have the shortest run and all pipes should run slightly "downhill" to allow for automatic drain-down of the plumbing and solar array. If this is not possible, manual drain valves must be installed as needed.

Note: If the existing pool mechanical room is near the house, you may prefer to complete the necessary plumbing there before connecting between the roof and ground level. That way you will know exactly where the pipes should come down from the roof.

FEED AND RETURN LINES

Feed and return lines are connected using a PPC connector and a Pipe Adaptor. The remaining two open corners of the bank are sealed using PPC connectors and End Caps.

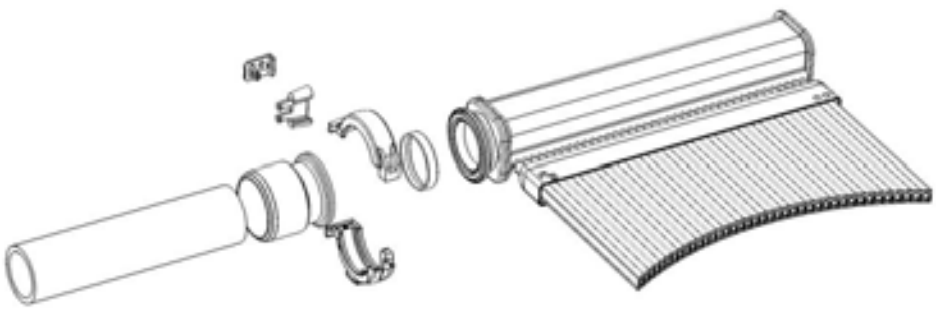

Figure 9: Connecting plumbing line to the collector

To connect the feed and return lines:

1. Connect the feed line to the low end of the bottom header, which should be the corner farthest from the pool pump, using a **PPC** connector and a **Pipe Adaptor**.
2. Connect the return line to the top header on the opposite end of the bank. This gives the heated pool water the shortest route back to the pool.
3. Block the remaining two corners of the bank using **End Caps** attached with **PPC** connectors.
4. Connect the feed and return pipes using reliable plumbing techniques.

CONNECTING TO EXISTING FILTRATION SYSTEM

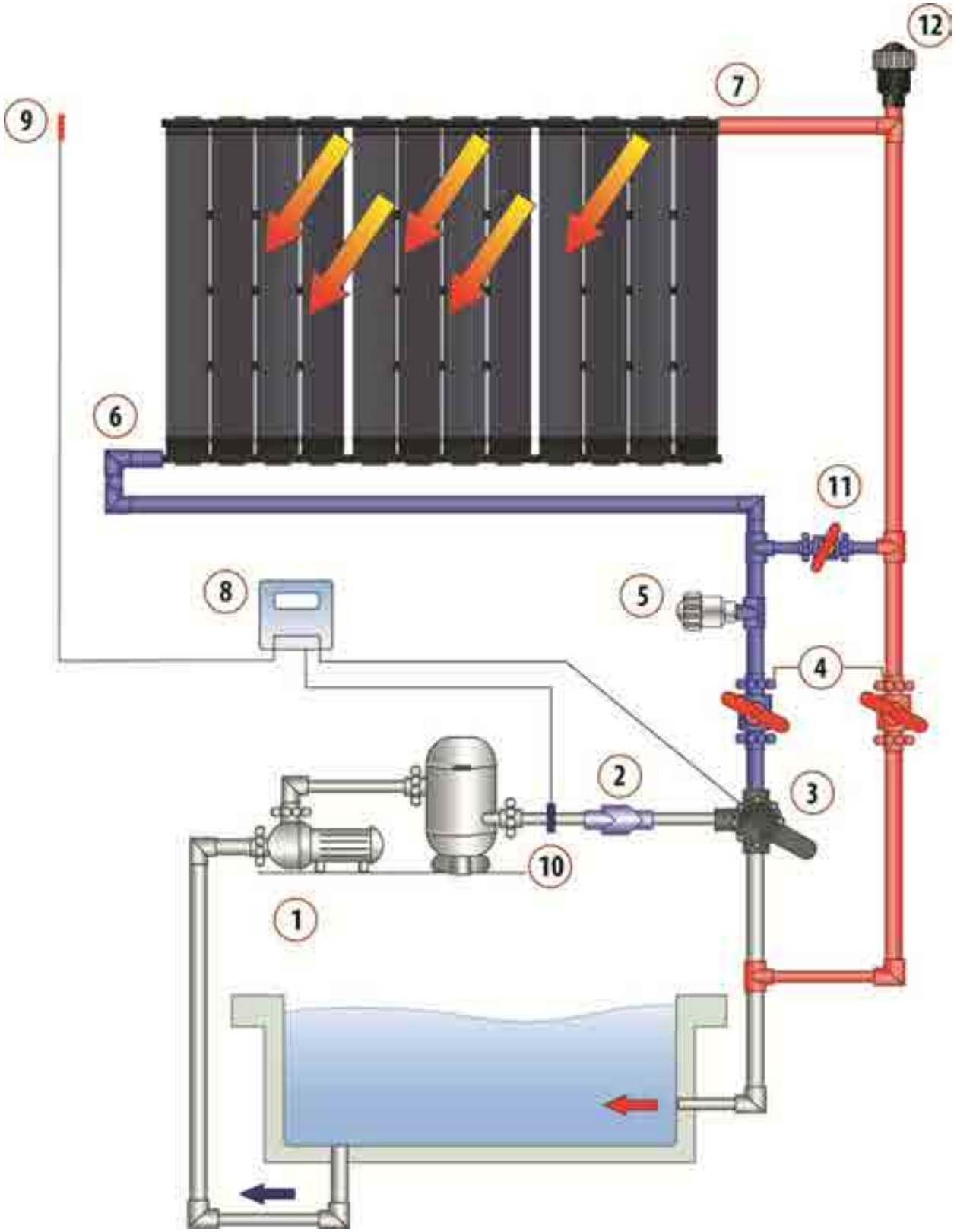

PLUMBING GUIDELINES

The figure in the former page illustrates how a typical eco-Spark® solar pool heating system is connected to a pools' plumbing. Even if your system is not identical to the one shown, the illustration can help you understand the flow of water from the pool, through the pump, filter, solar system and back to the pool.

Notice that the union check valve is plumbed in *after* the filter. This prevents the filter from being backwashed by the water draining down from the panels when the pump shuts off.

Notice also that the 3-way valve either diverts the water to the solar system or directly back to the pool. This 3-way valve should be a non-positive valve. This enables the water in the solar system to drain back to the pool when the pump shuts off. The ball valves on the solar feed and return lines allow you to completely isolate the eco-Spark® Solar System.

1. Using the existing circulation pump, the water flows through the filter and then directed to the collectors.
2. Check valve for preventing backwash of the filter when the collectors drain down.
3. 3-way-valve that automatically directs the water to the collectors when there is efficient sun radiation and heating demand. It is recommended to drill a hole 6mm (0.2") in the valve's partition.
4. Two ball valves for disconnecting the solar panels from the filtration plumbing in different seasons or in cases of leakages. **Customer should be guided never to close both of them without draining the collectors first!**
5. Vacuum release valve (white) – optional, for automatic draining of the panels after the solar system shuts off. Can be installed either vertically or horizontally.
6. Inlet to the solar panels at the lowest side of the bank, using the “reverse return” method.
7. Outlet from the solar panels back to the pool.
8. Differential solar controller that commands the motorized 3-way-valve, using two temperature sensors.
9. Roof temperature sensor, exposed to the sun similarly to the panels.
10. Pool temperature sensor, installed into the main filtering pipe for measuring the correct pool temperature.
11. By-pass ball valve for seasonal tempering of the hot water. The heated water might reach very high temperatures (up to 90°C, 194°F)! Tempering methods are essential and can be achieved using a gradual electric valve that its opening lasts several minutes, or by installing a by-pass for mixing cold water with the heated water.
12. Air/Vacuum release valve (black) – Should be installed at the highest point in the system, after the collectors. For releasing the air trapped in the system while the system is turned on and allowing air into the system and water draining while the system is being turned off. **Must be installed vertically!**

CONNECT WITH THE FILTRATION SYSTEM

1. Study the plumbing after the filter and decide where you are going to install the union check valve and the “T” fitting for the solar system entrance. If you have auxiliary equipment, you may need to re-plumb a portion of your existing plumbing so this equipment is located after the eco-Spark® system.
2. Cut the pipe after the filter where you have decided to locate the union check valve and where your solar return pipe will attach to your existing pool return line.
3. As mentioned earlier, it is a good idea to assemble all pipe and fittings before connecting them just in case you make an error. Install a union check valve on the pipe coming out of the filter. Be sure that the arrow showing flow direction is pointed *away* from the filter.
4. The 3-way-valve is installed next. Before installing this valve it is recommended to drill a 6 mm (0.2") hole inside the valve partition in order to enable water expansion due to stagnation pressure. It may come right next to the check valve, or you may have to use some pipe and fittings to locate it off the main line. (As stated earlier, use as few 90° elbows as possible.)
5. Install the ball valve to the solar feed coming out of the 3-way-valve.
6. Install the vacuum breaker about 2m up the feed line using a "T" connector or saddle weld on, and threaded ¾’’ elbow. Face the "T" to the outside as shown. Wrap the threads of the vacuum Breaker with "Teflon" tape and screw it into the threaded reducer bushing.
7. Install the second ball valve to the solar return line.
8. Now determine where to locate the "T" fitting. The "T" may be located right next to the 3-way-valve or elsewhere depending on your system. Connect the "T" fitting first to the solar return line, then to the 3-way-valve, and then to the pool return line.
9. Once you are satisfied with the plumbing arrangement, go back and cement/weld together all unsealed joints.

Note: Use Pipe Clamps the same size as the outside diameter of your plumbing fittings to secure the pipe and fittings tightly to the wall.

Note: When cementing check valves, try to do so in a horizontal position to prevent cement from dripping into the spring loaded valve and cementing it closed! When this is not possible, use cement sparingly and allow it to dry slightly before inserting the pipe into the socket. When cementing 2 and 3-way- valves either remove the diverter from the valve or cement with the diverter turned away from any open port to prevent the cement from running onto the diverter and cementing it in place! In cooler climates glue dries much slower.

RUNNING FEED AND RETURN LINES TO GROUND LEVEL

To run feed and return lines to ground level:

1. Connect the appropriate sized 90° elbow to the return line stub, facing down towards the bottom header.
2. Repeat the process for the feed line header stub, again with the elbow facing down, away from the bank.

Tip: During the pipelines installation, place a rag on the roof, under the joint, to avoid dripping cement or damage to the mounting surface with a hot welding tool.

3. Determine the position on the edge of the roof that the feed and return pipes will pass over. If possible this should be perpendicular to the exact points where they will fasten into the existing system (or into pipes coming from another location). (See page 33).
4. Measure the distance from the return elbow down to the spot that you want to go, across the roof, to the point established above. *Be sure to include the overlap of the socket into the elbow in your measurement.* Cut a piece of pipe to this length. Repeat this process for the feed line.

Tip: If you are not experienced at cutting and fitting pipes, it is a good idea to assemble all pipes and fittings before cementing or welding them, just in case there is an error.

5. Measure across the roof from these pipes to the points established in step 3. Cut the pipes to these lengths, debur the ends, and assemble the corners with 90° elbows.
6. Continue this process around the edge of the roof and down to the existing plumbing, keeping pipes as short, straight and close to the building as possible.
7. Once you are satisfied with the plumbing structure, go back and cement/weld all joints together.
8. Secure long pipe runs with clamps, one size larger than the pipe diameter, using stainless steel lag bolts and silicone/polyurethane caulk.
9. Secure vertical pipe runs on the side of buildings with clamps *the same size* as the pipe diameter, using screws and anchors as needed.

Important: All four corners of each bank of panels must be securely fastened to the roof, while enabling thermal expansion & contraction of the panels.

Important: All plumbing must be supported with clamps or pipe straps.

AUTOMATIC SYSTEMS (PRIVATE & PUBLIC POOLS)

The basic difference between the manual system just outlined and an automatic system is the use of a motorized 3-way valve, which is controlled by two sensors. In cloudy weather conditions the connection with the pool automatically shuts off to maintain the warmest temperature possible. The two sensors will read: (1) temp of cool water coming from the pool and (2) the heat of the available solar radiation.

Follow the directions included with the automatic system components for installing the differential control and sensors. The 3-way valve is installed as shown in page 33.

Important: Make sure that the roof temperature sensor which is located on the roof is exposed to the sun in the same way the collectors are. Position the sensor between two modules close to the glazing.

Private pool basic plumbing

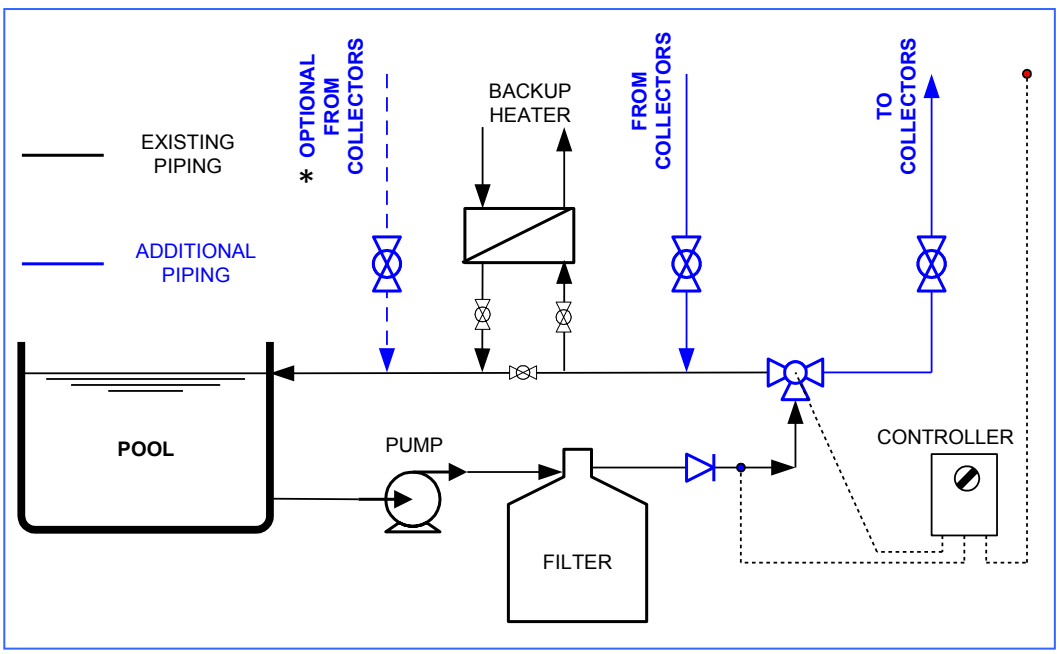

*To avoid that both heaters and solar system will be operating in parallel, make sure that heater sensor is installed **after** the solar system.

When the existing filtration pump is sufficient to deliver the desired discharge to the collectors, there is no need for additional booster pump. The system plumbing and control is based on the existing pump and a motorized 3 way valve that directs the pool water to the collector when there is sufficient sun radiation. If the circulation pump is operated by a timer, make sure that the timer is set to work during solar radiation hours.

Public pool basic plumbing

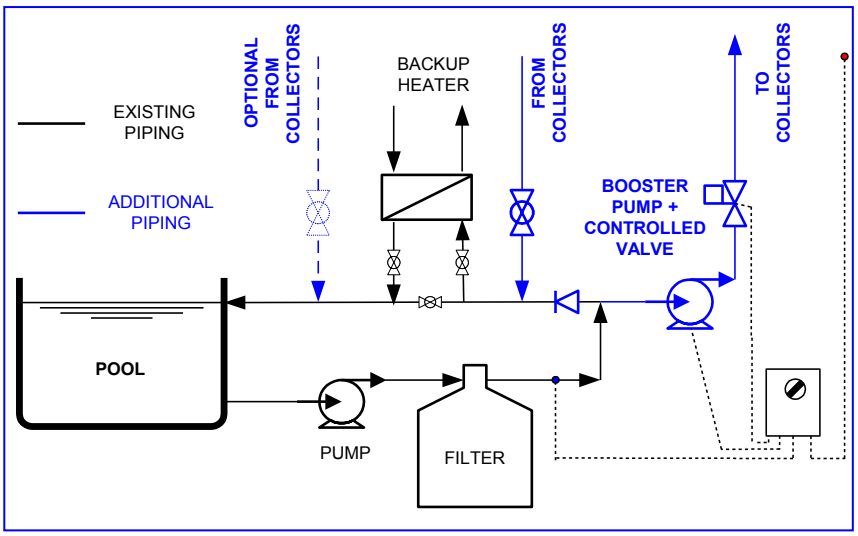

The additional booster pump should be installed after the filter, using a “T” joint on the main filtration pipe. The automatic control commands both the booster pump and the 2 way valve after it. (The 2 way valve is installed in order to prevent undesired low water flow through the collectors caused by the main filtration pump). The booster pump has to be connected to the main circulation pump, so its operation will be conditioned with the main pump's operation. If the circulation pump is operated by a timer, make sure that the timer is set to work during solar radiation hours.

Public pool basic plumbing 2

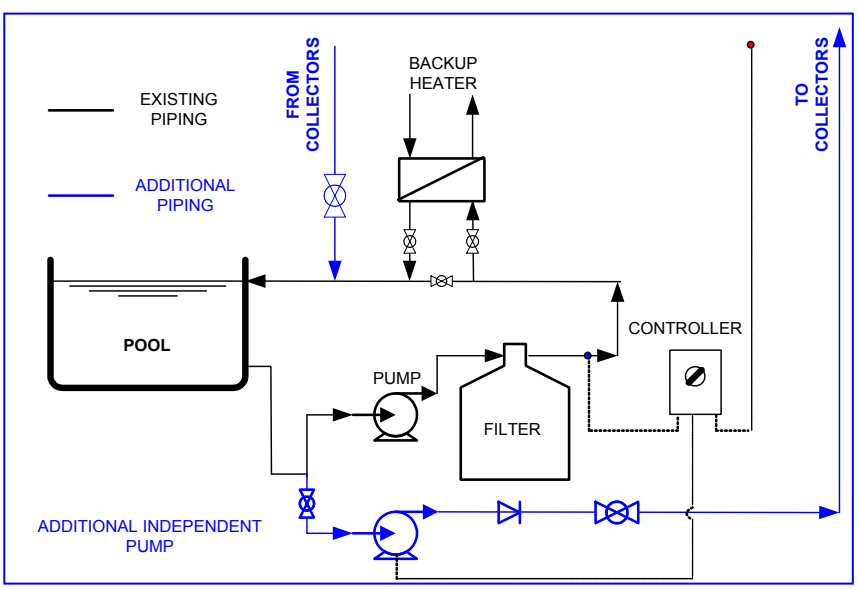

When there is a need for total separation between the solar piping and the filtration piping it is advisable to pump the water to the collectors by an independent pump that takes the water directly from the pool and returns the heated water directly to the pool. If the circulation pump is operated by a timer, make sure that the timer is set to work during solar radiation hours.

OPERATION

If you have carefully followed the steps in this manual, you now have an efficient, professional looking eco-Spark® solar pool heating system. This chapter deals with the final checks before you let water into the system, high pressure testing of the system, and turning the system on and off.

BEFORE LETTING WATER INTO THE SYSTEM

1. Allow the cemented/welded fittings adequate time to dry and cool according to the manufacturer's instructions.
2. Verify that the check valves, control valves and vacuum breaker are installed properly.
3. Verify that all PPC connectors are tightly fastened.
4. Verify that all lag bolts are secured and that adequate sealant has been used to prevent any roof leaks where they are attached.
5. Make sure that the system drains down automatically when the pump is shut off, or that manual drain valves have been installed and closed.
6. Verify that all pipe runs are properly supported.
7. Pressure test the system as described in the next section.

HIGH PRESSURE TESTING

High pressure testing the eco-Spark® system is essential!

1. Allow ample time for all joints to dry or cool completely.
2. Unscrew the vacuum breaker and replace it with the pressure testing assembly.
3. Connect one end of a hose to the water supply and the other end to the pressure testing assembly.
4. Turn on the water supply and wait for the pressure to reach 4–5 bar (60-70 psi).
5. Check all joints for leaks.
6. If there are leaks:
   a. Open the ball valve on the return line to relieve the pressure.
   b. Repair leaks.
   c. Repeat the pressure testing procedure as needed.
7. When pressure testing is complete re-install the vacuum breaker.

Tip: Use this time to wrap up things and to clean up the job site.

TURNING THE SYSTEM ON (MANUAL SYSTEMS)

1. Turn the pool pump off.
2. Turn the 3-way valve so the “closed” indicator points towards the pool side of the valve.
3. Be sure that the ball valves on the feed and return lines are open.
4. Turn the pool pump on.
5. If in use, set the pool pump timer so that the pump will run when the sun is shining on the solar panels. (Usually 10:00 AM to 4:00 PM, but this will vary with geographic location and season.)
6. Wait 2-3 minutes and check the pool inlets. By now, slightly warmer water should be entering the pool through the water inlet. Do not expect hot water to come out – temperature difference between inlet and outlet should be about 3°C (5°F).

Important: During the cooler months of the year it is essential that the pool surface be covered at night with a “pool blanket” to minimize heat loss. Low night time temperatures may lower the water temperature by more than what the solar system can recover during the day.

TURNING THE SYSTEM ON (AUTOMATIC SYSTEMS)

1. Turn the pool pump off.
2. Switch the automatic control system on.
   If the 3-way valve was previously off, it will rotate to direct water into the system.
3. Verify that the ball valves on the feed and return lines are open.
4. Turn the pool pump on.
5. If in use, set the pool pump timer so that the pump will run when the sun is shining on the solar panels. (Usually 10:00 AM to 4:00 PM, but this will vary with geographic location and time of year.)
6. Wait 2-3 minutes and check that slightly warmer should be entering the pool through the water inlet. Do not expect hot water to come out – temperature difference between inlet and outlet should be about 3°C (5°F).
7. After you have checked that the system is working sufficiently, turn the control switch to automatic position and set the required temperature on the control panel.

TURNING THE SYSTEM OFF (MANUAL SYSTEMS)

1. Turn the pool pump off.
2. Turn the 3-way valve so the “closed” indicator points towards the “solar” side of the valve.
3. To drain the water from the system, open the outlet valve (see red valve #4 on page 33) and let the water drain from the system. Leave the valve open as long as the system is not in use. If a non-return valve (#2 on page 33) is installed as instructed, the solar system will be protected when not in use.
4. Turn on the pools circulation pump.

TURNING THE SYSTEM OFF (AUTOMATIC SYSTEMS)

1. Switch the system's controller off.
2. To drain the water from the system, open the outlet valve (see red valve #4 on page 33) and let the water drain from the system. Leave the valve open as long as the system is not in use. If a non-return valve (#2 on page 33) is installed as instructed, the solar system will be protected when not in use.

MAINTENANCE

This section will help you maintain your system efficiently so you can enjoy it for longer.

MAINTENANCE REQUIREMENTS

Collector's glazing may be rinsed periodically to remove dust and improve efficiency. Glazing can be cleaned with a soft sponge or cloth made from 100% cotton using lukewarm water and a mild dishwashing detergent. Glazing should then be rinsed with cold water.

General guidelines:

- Never use abrasive or high alkaline cleaners on the eco-SPARK® glazing
- Do not leave cleaner on the glazing for long periods of time. Immediately rinse with cold, clean water
- Never use sharp objects or squeegees on the glazing
- Do not clean with gasoline or petroleum based solvents
- Avoid stepping on the eco-SPARK® panels
- Test cleaners in a small inconspicuous area before cleaning the entire panel
- Avoid dry cleaning! Sand and dust particles clinging to the glazing my scratch it

TROUBLSHOOTING

This section will assist in identifying and solving problems as quickly and as effectively as possible

THERE ARE AIR BUBBLES IN THE POOL WHEN THE SOLAR HEATER IS OPERATING

Diagnosis #1: There might be air coming into the pump through an air leak on the suction side of the pump due to the pump working harder to move the water through the solar system.

Pump Answers:

1. Check that the pump trap lid is secured tightly.
2. Check the O-ring on the pump trap lid. Clean, lubricate or replace as needed.
3. If you have a suction type pool cleaner, remove it. If this eliminates the air bubbles, use it only when the solar system is off.
4. If the pump has a clear lid and you can see air bubbles in the trap, use a garden hose to run water over the lid, and each joint individually, to see if the air bubbles will clear up. If the lid is opaque, listen to the pump to check that it is operating smoothly. Repair any air leaks.

Diagnosis #2: If the air relief valve is installed on the roof, there may not be enough water pressure in the system to keep the air/vacuum relief valve closed, so air could be drawn into the water as it flows through the valve.

Install Answers:

1. Check that the filter is clean. Backwash to reduce pressure loss.
2. Locate the air/vacuum breaker (should be installed on the roof, at the highest point of the system). Instead of the air/vacuum breaker put a solid end cap. Install a vacuum valve (white) on the feed line as shown on page 33.
3. Using the ball valve on the return line, throttle back the flow to produce more back pressure on the system.

SOME OF THE SOLAR PANELS ARE WARM TO THE TOUCH WHILE OTHERS ARE COOL

Diagnosis: The water flow inside the panel is not uniform. Warm panels indicate low water flow.

Pump Answers:

1. Check that the filter is clean. Backwash to reduce pressure loss.
2. The pump may not be providing enough water to the solar system. Check the water flow using a flow meter. Increase pump's horsepower to maintain recommended flow.
3. If there is a suction type cleaner in the pool, disconnect it. If this eliminates the problem, use it only when the solar system is off.

Install Answers:

1. If the system is a single row array and there is adequate flow, use a Ball Valve on the return line to throttle the flow back to increase back pressure on the system. This will even out the flow through the panels. If the array contains more panels than the maximum recommended on table 2, Page 17 of this manual, change the array to a double row or single row split feed as shown on Page 18.

2. If the system is a double row or a single row split feed array and there is adequate flow, install a Ball Valve on the return side of the set of panels that are the coolest, throttle back the flow through these panels and force more water through the warmer panels. **Do not install a system that exceeds the Maximum number of panels allowed in a system!**

WATER COMING FROM THE SYSTEM IS NOT AS WARM AS IT SHOULD BE

Diagnosis #1: The water is flowing too fast through the panels

Install Answer:

- Test the water flow rate. Water flow through a single panel should be less than 1000 lit/h (4.4 gpm). Adjust the Three-Way Valve to by-pass some of the water.

Diagnosis #2: Seasonal normal operation

Answer:

- In the cooler months of the year, or on cool or partly cloudy days, the temperature rise through the panels may only be 3° C (5°F). Use the back of your hand to feel the water temperature difference at the pool return inlet.

DISABLING A DAMAGED RISER TUBE

In the event of a riser getting damaged and leaking, one of the advantages of the eco-Spark® collectors is the ease with which the leaking riser can be disabled, the leak repaired, and the disabled riser attached to maintain the uniform appearance of the panel.
A damaged riser is disabled using an eco-Spark®/Sunstar® riser repair kit (consisting of two rubber sleeves and two plastic plugs), and the broken riser itself.

Note: Water does not run through the disabled riser. The purpose of the disabled riser is only to maintain the uniform appearance of the panel.

Figure 10: Riser repair plug (left) and sleeve (right)

Cat. Num. 1203910

Figure 11: Riser repair tools:

Specific eco-Spark® repair handle

Cat. Num. 1202880

6 mm (¼ inch) Chisel

Important: Do not use a chisel more than 6mm (¼ inch) wide, as you might damage the adjacent risers as you remove the broken riser.

1 Remove both stoppers from the panel that requires fixing and keep them nearby.

2 Using a 6 mm chisel, and holding the flat side of the chisel towards the header, cut through the damaged riser, flush against the header. A round hole is created in the manifold header.

3 Spray the rubber sleeve with a silicone spray lubricant and pull it over the small metal pin of the repair handle.

Stretch and relax the rubber sleeve a number of times over the metal pin.

4 Gently push the rubber sleeve into the hole created by the removal of the riser, until only the head is showing.

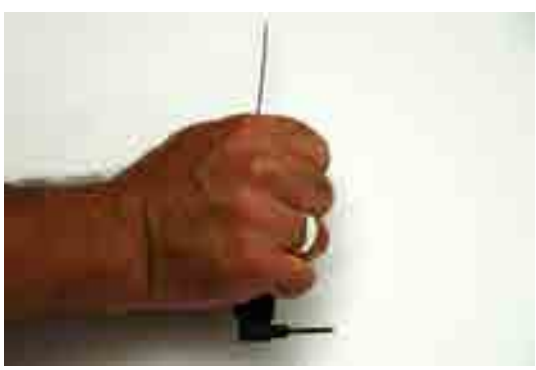

5 Insert the repair pin onto the handle.

6 Push the plastic repair plug all the way down into the repair sleeve. You may use the rear part of the handle to push it firmly into the sleeve.

The hole is now plugged and will not leak.

7 Cut the riser tube so it fits exactly between the broad heads of the plastic pins. Fit the riser onto the stub of the repair plug.

8 Grab the polycarbonate glazing with both hands, and firmly pull towards you to expose the risers on the other side of the panel.

9 Repeat steps **2** to **7** for the end of the panel you just exposed.

10 Pull back the glazing to its original position and re-attach the stoppers.

11 The panel is now leak free while its uniform appearance is restored.

ECO-SPARK® FOR PRE-HEATING

eco-SPARK® solar collectors are perfect for pre-heating systems. There are two types of pre-heating systems that eco-SPARK® will provide the most cost-effective solution:

1. Direct pre-heating
2. Storage tank circulation system

There are many configurations for these systems; design the system so it meets users' requirements.

Important! System MUST be designed by a professional engineer.

Important! Storage of hot water must conform to local health codes to avoid the breading of the Legionellosis bacteria.

DIRECT PRE-HEATING

The eco-SPARK® system is installed on the feed line before the auxiliary (conventional) heating system. The principal is very simple: when there is hot water demand and the climate conditions are adequate, the eco-SPARK® system will turn on and the water will be heated as much as the climate conditions enable. When there is no demand or when conditions are insufficient, the system will be bypassed.

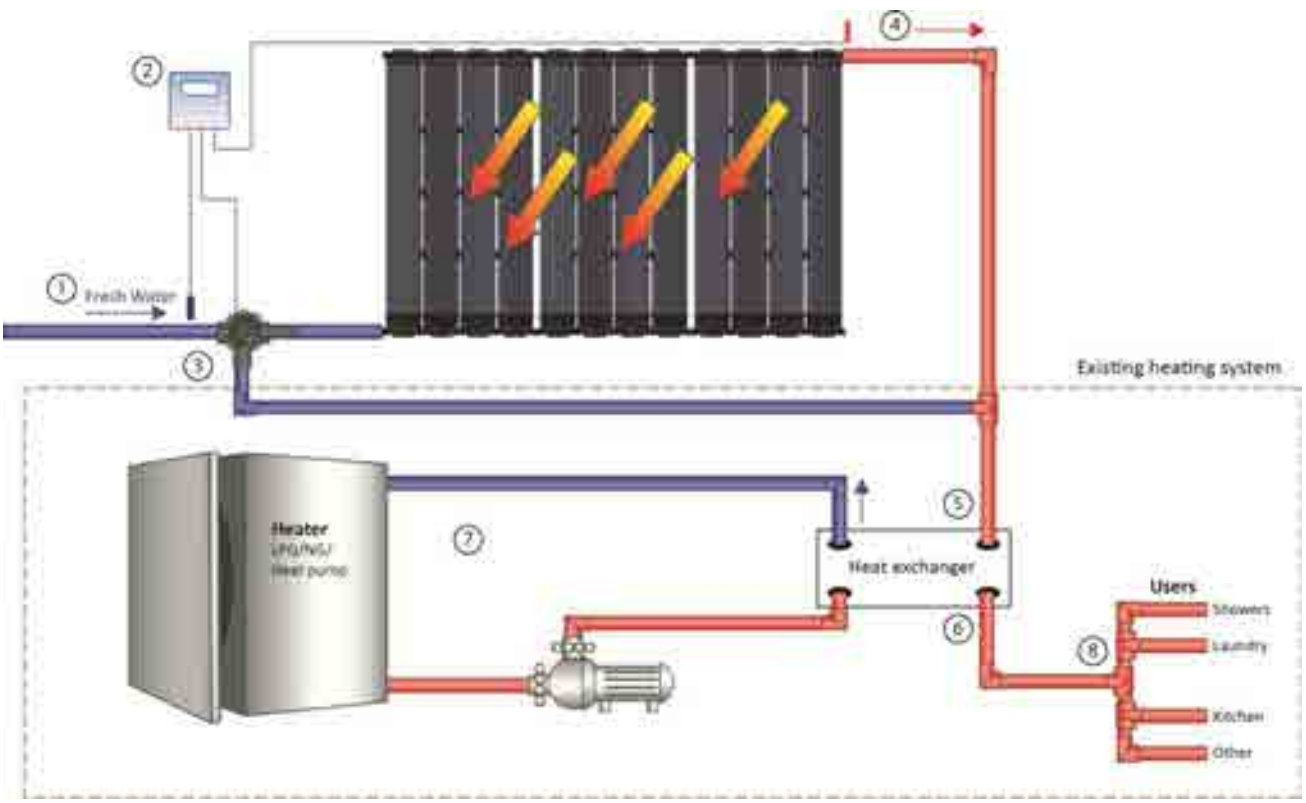

1. Fresh water feeds into the solar panels at grid pressure (max. 4 bar/60 psi) whenever there is demand.
2. Differential controller operates the system according to the temperature sensors.
3. A 3-way-valve diverts the feed water either to the solar system or the bypass for the auxiliary heating system.
4. The heated water flows out of the collectors.
5. Water enters the heat exchanger for complimentary heating by conventional heating methods.
6. Water exits from the heat exchanger at the required temperature (preset).
7. Conventional heating system (based on gas, diesel, electricity etc').
8. Hot water distribution station for users.

<u>System must be designed by a professional engineer considering the following:</u>

Flow rates

- The total flow is dictated by the demand therefore the solar panel banks should be designed so that the flow in each panel should be an average of 300 l/h (1.3 gpm).
- Bank arrangements should not exceed more than 3 to 4 banks in one series.

Piping

- Design the pipe diameters so that the waters' velocity will not exceed 1.7 m/s (5.5 ft/s).
- Piping must resist high temperatures. Use PEX/PPR/CPVC certified or authorized for drinking water contact.
- Take into account that the plastic expands and contracts with temperature changes. Allow movement of pipes and fittings accordingly.
- Make sure that the diameter of the pipes you are adding is not smaller than the diameter of the pipes in the auxiliary system**.**

Control

- A controller that commands both the auxiliary heating and solar systems will provide the maximum performance.
- The control system in the drawing is the basic system for operation. If required a more complex control system can be installed in order to measure the energy delivered to the user.
- A professional control system should record the measured parameters of the system and the ambient parameters.

SOLAR HOT WATER STORAGE TANK

The eco-SPARK® system can be installed as an open or closed loop system and circulates the water in the storage tank. The system is in installed on the feed line to the current conventional heating system. The feed enters the storage tank. The storage tank accumulates energy according to the performance of the collectors and user demand.

Important! System MUST be designed by a professional engineer.

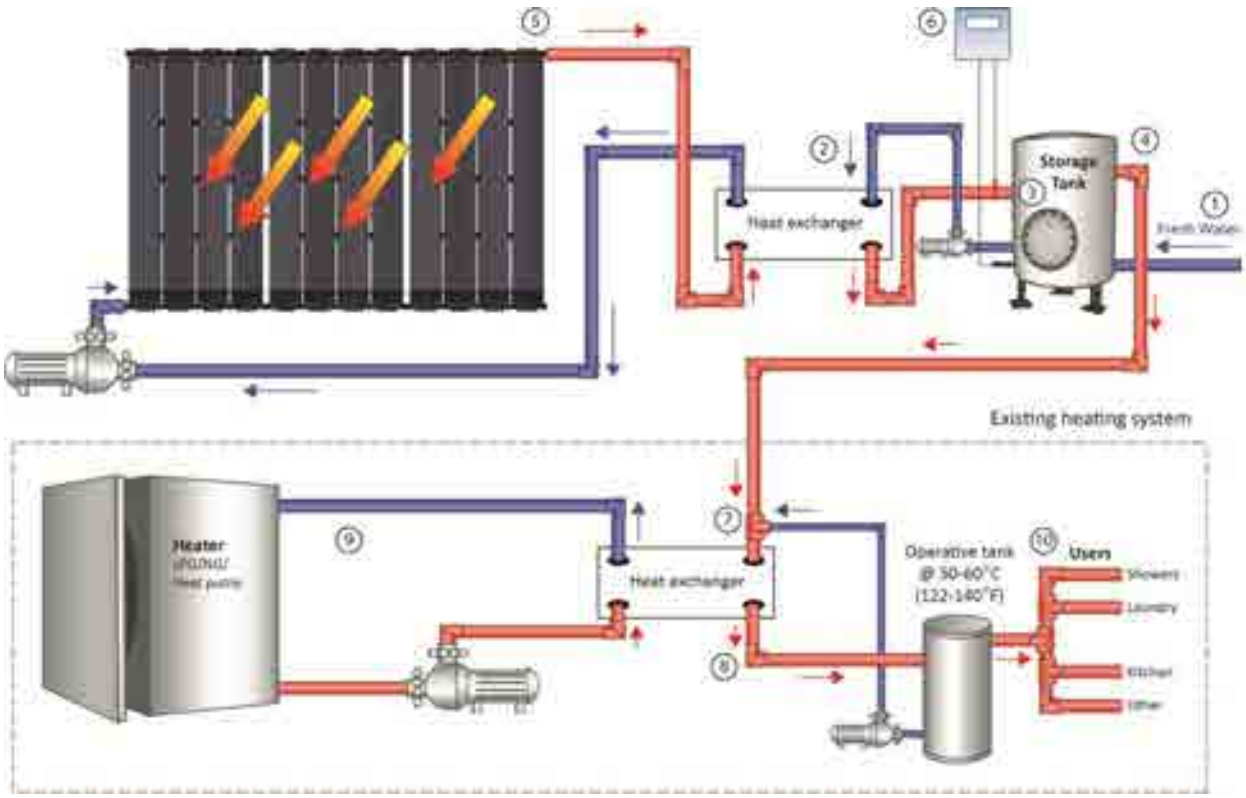

1. Fresh water feeds into the lower part of the solar storage tank at grid pressure whenever there is demand.
2. Water enters from the lower part of the storage tank to the heat exchanger according to temperature difference which is detected by the controller. The heat exchanger's energy is supplied by the solar system.
3. Heated water from the heat exchanger flow through the upper part of the storage tank.
4. Heated water flows out of the storage tank into the auxiliary heating system whenever there is demand.
5. Solar system – closed loop system provides hot water (heated by the sun) to the heat exchanger, where the heat is transferred to the feed water. The solar system can be operated by a differential controller with temperature sensors or just a pump with a timer.
6. Differential controller operates the system according to temperature sensors.
7. Water enters the heat exchanger for complimentary heating by conventional heating methods.
8. Water exits from the heat exchanger at the required temperature (preset).
9. Conventional heating system (based on gas, diesel, electricity etc').

10. Hot water distribution station for users.

<u>System must be designed by a professional engineer considering the following:</u>

Flow rates

- The flow in each panel should be an average of 300 l/h (1.3 gpm).
- Bank arrangements should not exceed more than 3 banks in one series (consider specific conditions to determine number of banks).

Piping

- Design the pipe diameters so that the waters' velocity will not exceed 1.7 m/s (5.5 ft/s).
- Piping must resist high temperatures. Use PEX/PPR/CPVC certified or authorized for drinking water contact.
- Take into account that the plastic expands and contracts with temperature changes. Allow movement of pipes and fittings accordingly.
- Make sure that the diameter of the pipes you are adding is not smaller than the diameter of the pipes in the auxiliary system**.**

Control

- A controller that commands both the auxiliary heating and solar systems will provide the maximum performance.
- The control system in the drawing is the basic system for operation. If required a more complex control system can be installed in order to measure the energy delivered to the user.
- A professional control system should record the measured parameters of the system and the ambient parameters.

Storage tank

- Storage tank's volume should be about 60% of daily water demand.
- Account for 1m² (10') collectors' area for each 75 liters (20 gallons) storage volume.
- All accessories and maintenance of storage tank must comply will local health codes to avoid the breading of the Legionellosis bacteria.